Profile Technology

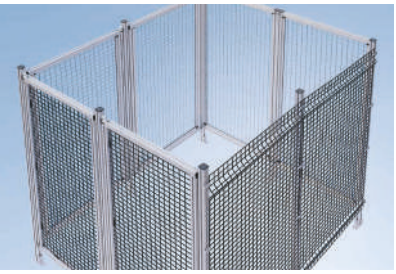

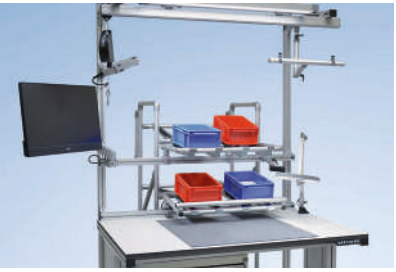

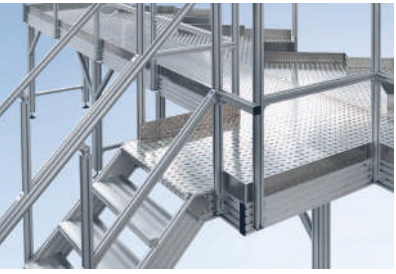

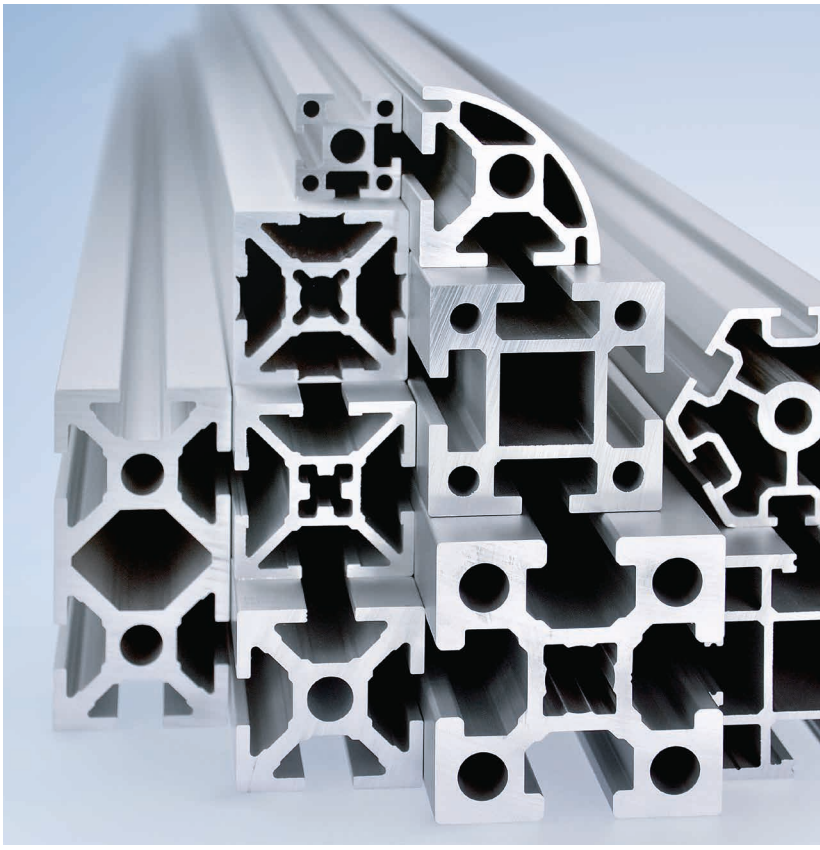

Profile System. Guarding.
Industrial Workstations. Platforms.

Edition 7.0

One Construction Kit. Countless Possibilities.

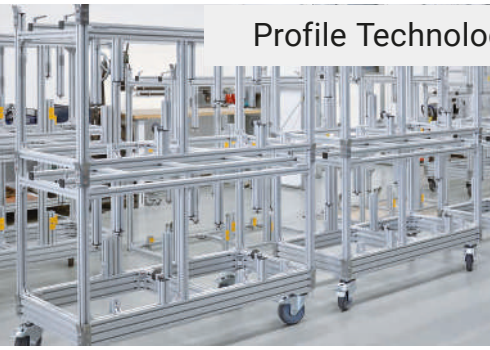

Profile Technology

Conveyor Technology

System Solutions

Services

» Components, modules and solutions for factory automation. «

Maschinenbau Kitz, the parent company of the mk Technology Group, was founded in 1966 in Troisdorf, near Bonn, Germany. mk is one of the leading suppliers of components, modules and systems for factory automation.

Its portfolio of profile technology includes workstation set-ups, guarding and customde-signed machine frames and platforms, in addition to the aluminium profile system on which these are based.

In terms of conveyor technology, mk offers an extensive range of standardised conveyor types, supplemented with linear technology for precision handling applications.

Furthermore, mk is at hand to assist its cus-tomers with system solutions, from project planning and design to the commissioning of complete transfer systems.

Our services round off the product portfolio and include repairs, maintenance and a spare parts supply service.

With our dense production, sales and service network consisting of subsidiaries, sales partners and external service providers, we guarantee our customers fast access to our expert advice and outstanding products.

Overview of Sections

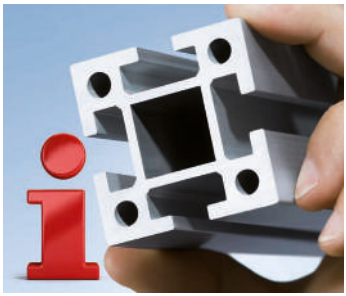

Notes 1

Benefits of mk ProfileTechnology 6
Explanation of Symbols 8
Shop and CAD Data 9

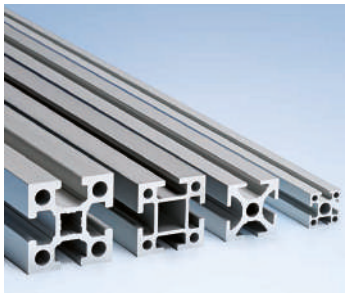

Profiles 2

Choosing a Profile 12
Profile Services 16
Overview of Profiles 22
Series D28 Profiles 40
Series 25 Profiles 42
Series 40 Profiles 50
Series 50 Profiles 62
Series 60 Profiles 68

Connecting Elements 3

Choosing a Connection 74
Angle Fasteners 78
Plate Fasteners 96
Internal Fasteners 106
Corner Block Joints 120
Profile Clamps 130
Connector Series D28 132
Nuts/T-nuts 138
Standard Parts 145

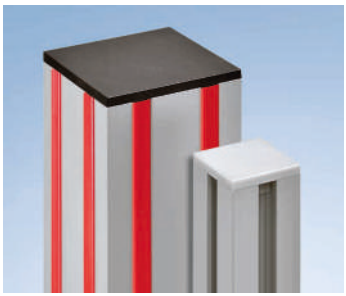

Covers/ Wear Strips 4

End Caps 150
Closure Strips 156
Cover Profiles 157
Wear Strips 158
Brush Strips 162

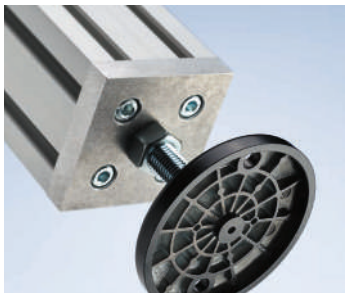

Floor Elements 5

Levelling Feet 166
Plates for Levelling Feet 174
Floor Plates 180
Base Plates 184
Support Brackets 188
Fixed and Swivel Casters 192

Accessory Components 6

Cover Profiles 196
Hinges 198
Installation Elements 202
Operating Elements 208
Conveying Elements 210
Other Accessories 214

Guarding 7

Notes on Guarding 218
Partitions and Doors 222
Windows 234
Panelling 240
Door and Window Components 256
Safety Accessories 266
Handles 274

Industrial Workstations 8

Notes on Industrial Workstations 280
Table Frames 284
Table Tops 290
Drawer Cabinets 292
Gantries 294
Provision of Material 296
Lighting 306
Power Supply 310
Accessories 314
Application Profiles for Workstations 316

Stairs and Platforms 9

Notes on Stairs and Platforms 322
Stairs 324
Platforms 328
Guardrails 330

Tools 10

Drills 336
Taps and Forming Taps 336
Installation Tools 336
Allen Wrench Set 337
Magnetic Holders for Nuts 337
Parting Tool for Cleanroom Profiles 337
Sanding Sponge 337
Drilling Jigs 338

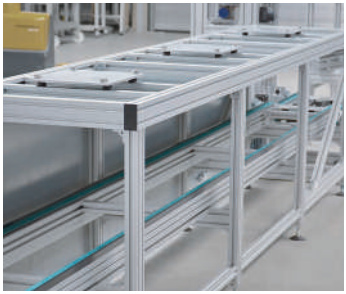

Application Examples 11

Application Examples with Instructions for Mounting 342
Application Examples – General Profile Technology 358
Application Examples – Guarding 364
Application Examples – Industrial Workstations 374
Application Examples – Stairs and Platforms 386

Benefits of mk Profile Technology

1

» mk profile technology offers maximum flexibility and reliability. «

Our profile technology consists of the proven, versatile mk profile system as the common base technology as well as the workshop and industrial applications that are based on this system.

Profile System
The modular mk profile system has the right profile, the right connection technology and the right accessories for every application. The system's flexible modular design provides virtually endless possibilities for custom-designed structures and solutions.

Guarding
Our guarding range is based on the mk profile system and offers functional machine housings, enclosures and protective fences. Their flexible, modular design ensures that systems, machines and production areas can be secured effectively and economically.

Workstation Set-Ups
Industrial workstations built from mk's profile system offer maximum ergonomics and functionality to optimise your employees' productivity. These workstations can be expanded into complete assembly lines including workstation interlinking to ensure optimised process flows.

Machine Frames and Platforms
Frames for machines and other systems are custom-manufactured and optimised for the customer's particular requirements and loads. Platforms with stairs offer safe access to various levels, whether mobile or stationary, to allow employees to maintain or work on machines and systems.

Benefits of mk Profile Technology

- Comprehensive profile system for maximum flexibility in all industries and applications
- No welding, abrasive grinding or painting necessary, unlike steel structures
- Sturdy profiles that combine high load capacity with attractive design
- Profiles and components can be reused
- 1 mm edge radius for virtually gap-free connections between profiles
- Sturdy and diverse connection technology with standard screws
- Online profile system shop with free CAD data
- Machine housings, enclosures and protective fences for effective and highly functional guarding of machines and systems
- Ergonomic industrial workstations built from mk profiles can be interlinked into assembly lines for maximum productivity
- Stairs and platforms for safe access to machines or production areas
- High degree of standardisation for short planning, design and assembly times
- Degree of assembly can be selected, from individual pieces, to assemblies, to custom-built frames and complete applications
- Expert on-site consulting by mk sales engineers

Profile System

Guarding

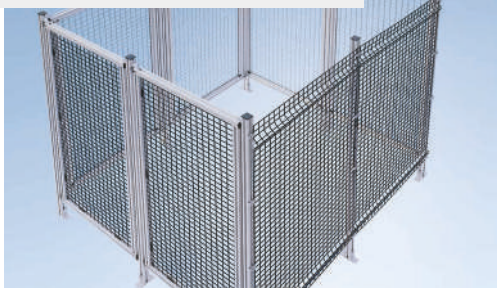

Industrial Workstations

Stairs and Platforms

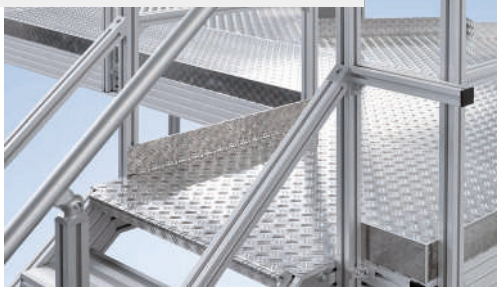

Explanation of Symbols

1

Profile series symbols

25 40 50 60
25 40 50 60
25 40 50 60
25 40 50 60

The symbols indicate the profile series in which a connecting element or accessory component can be used.

25 40 50 60
25 40 50 60

Depending on which fields are coloured in, components may be compatible with multiple profile series.

25 40 50 60
25 40 50 60

A light-blue field indicates that the component can be used in this series with certain conditions. Our technical sales department will be happy to advise you.

Connecting elements and accessory components without a series symbol can be used in all profile series. The D28 round tube profiles have their own range of connectors.

Slot Widths

These symbols indicate the slot width of the profile or profile series in millimetres.

Screws

M5x8
M8x16
M12x25

These symbols indicate the screws to be used (thread x length in mm). If screws compliant with a specific standard are required, this is also indicated.

Cross References

The cross reference symbol with a corresponding page number refers you to complimentary products or information that can be found elsewhere in the catalogue.

Curved Profiles

This symbol identifies select profiles that are also available in a curved variant. The number indicates the minimum possible inner radius in millimetres. The profiles can only be bent along the narrow side of the profile (horizontal bending axis).

ESD (Electrostatic Discharge)

Items labelled with the ESD symbol have a discharging or conductive design and are therefore suitable for used in ESD-sensitive areas or for creating ESD protection zones. These products guarantee a resistance to earth from the contact point of < 10^{11} ohms.

Item Number and Name

When placing an order, please always provide the item number and the product name. Our profiles can be ordered in one of our stock lengths or cut to a custom length. The last four digits indicate the desired length in mm.

Name
Profile mk 2040.01 (40x40)

Item number
54.01. ....

Length in mm (4 digits)

Profile ID number

Shop and CAD Data

24/7 Online Shop*

All products in our proven profile system are available to you after a one-time registration.

- Accessible from a computer, tablet or smartphone
- Products clearly organised into categories
- Images and product descriptions help you make your selection
- Search by name or item number
- Direct access to CAD data

CAD Data

Reduce your planning and design time by using our CAD parts library.

- Online in our shop or from the Cadenas Part Community
- Free access to CAD data
- Native and neutral CAD formats for easy processing
- 3D models or 2D CAD drawings
- Can be imported directly into customers' CAD programs

*Only for commercial customers in Germany and Austria

Section 2 Profiles

2

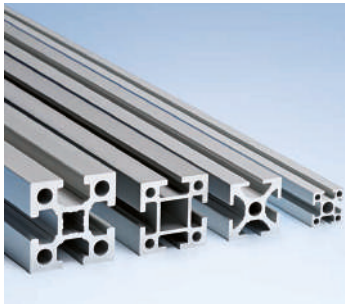

Choosing a Profile

Features of mk Aluminium Profiles 12
Deflection Calculator 13
Standards and Basic Information 14

Profile Services

End Services 16
Curved Profiles 20

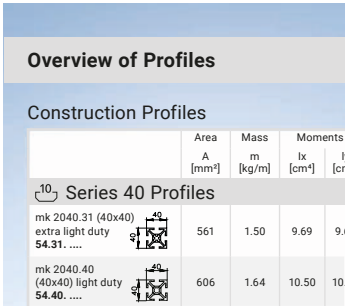

Overview of Profiles

Construction Profiles

	Area A [mm²]	Mass m [kg/m]	Moments Ix [cm⁴]	I [cr
Series 40 Profiles				
mk 2040.31 (40x40) extra light duty **54.31. ....**	561	1.50	9.69	9.
mk 2040.40 (40x40) light duty **54.40. ....**	606	1.64	10.50	10

Overview of Profiles

Construction profile dimensions 22
Construction Profiles 24
Application Profiles 34

Series D28 Profiles

Basic Profiles 40

Series 25 Profiles

Basic Profiles 42
Series 25/40 Adapter Profiles 46
Profiles for Fastening Panelling 48

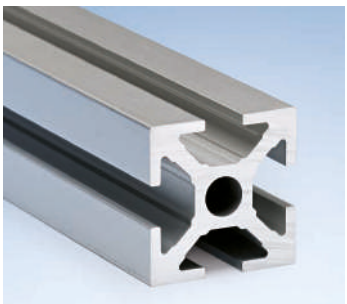

Series 40 Profiles

Basic Profiles 50
Cleanroom Profiles 56
Profiles for Fastening Panelling 59

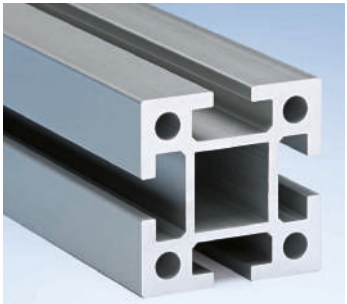

Series 50 Profiles

Basic Profiles 62
Cleanroom Profiles 66
Profiles for Telescoping 67

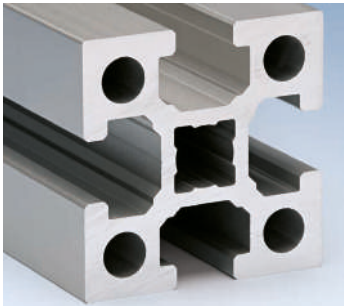

Series 60 Profiles

Basic Profiles 68

Application Profiles

The application profiles are included in the profile overview, and some are addressed in more detail in various sections for specific topics; see the cross references in the profile overview.

Features of mk Aluminium Profiles

With a large selection of profiles, divided into four series with grid dimensions of 25, 40, 50 and 60 mm, as well as the round tube profile series D28, we have the perfect profile for any application and for all load-capacity and design requirements. Our profiles are made from a high-quality aluminium alloy with an extremely durable anodised coating and employ connection technology designed to ensure maximum stability – for sturdiness and dependability that is never in doubt, and without compromising on design. The can be used to construct anything from light-duty fixtures, structures and frames to load-bearing structures for machine construction applications. In addition to construction profiles, our portfolio also includes application profiles for a range of different purposes, e.g. for guarding and workstation set-ups and for conveyor frames and side rails for use in conveyor technology.

All mk profiles have a small edge radius of only 1 mm, which provides a gapless connection between profiles.

- No space for dirt to accumulate
- Attractive design
- Profile structures with a closed slot are thus ideally suited for use in cleanrooms

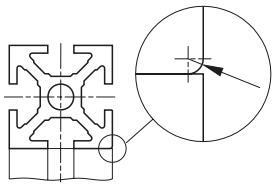

Overview of Profile Series

Series D28	Series 25	Series 40	Series 50	Series 60
		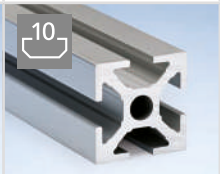	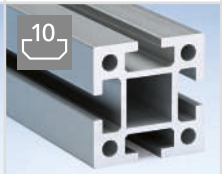	
Grid dimensions				
ø 28 mm 	25 x 25 mm 	40 x 40 mm 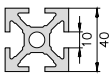	50 x 50 mm 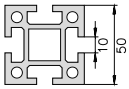	60 x 60 mm 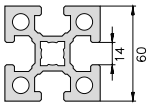
Dimensions max.				
ø 28 mm	25 x 150 mm or 50 x 50 mm	160 x 160 mm	50 x 200 mm or 100 x 100 mm	120 x 240 mm
Material				
EN AW 6063 T66 AlMgSi 0.5 F25	EN AW 6063 T66 AlMgSi 0.5 F25	EN AW 6063 T66 AlMgSi 0.5 F25	EN AW 6005A T6 AlMgSi 0.7 F27*	EN AW 6005A T6 AlMgSi 0.7 F27*
Application examples				
Supply trolley, shelves, lightweight frames, extensions for workstations	Light-duty frames, test set-ups, measurement and test units	Moderate to light-duty machine frames, guarding, industrial work-stations	Machine frames, load-bearing structures	Machine frames under very high loads, gantries

*May differ in certain cases

Deflection Calculator

Will your profile structure withstand the loads it is meant to support? Find out quickly and conveniently using our online tool for calculating the deflection of mk profiles as a function of load. The following formulas are used for the calculation.

$$\sigma_b = \frac{M_{bmax}}{W_{x,y}} \qquad S = \frac{R_{p0.2}}{\sigma_b}$$

$R_{p0.2}$ = 200 N/mm² (AlMgSi 0.5 F25)

$R_{p0.2}$ = 215 N/mm² (AlMgSi 0.7 F27)

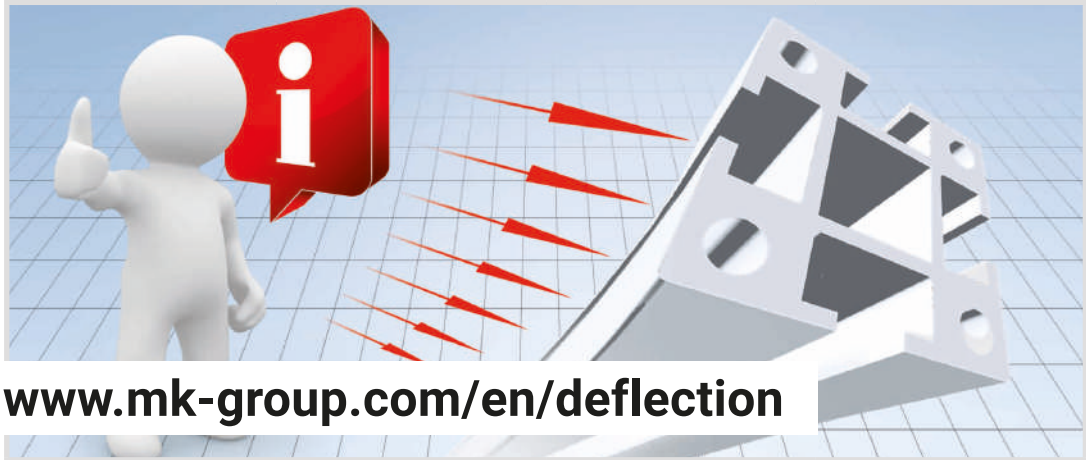

www.mk-group.com/en/deflection

Load scenario 1 (profile on two supports, flexible joints)

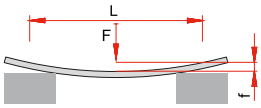

$$M_{bmax} = \frac{F \cdot L}{4}$$

$$f = \frac{F \cdot L^3}{48 \cdot E \cdot I_{x,y}}$$

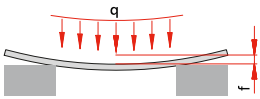

$$M_{bmax} = \frac{q \cdot L^2}{8}$$

$$f = \frac{5}{384} \cdot \frac{q \cdot L^4}{E \cdot I_{x,y}}$$

Load scenario 2 (profile on two supports, clamped at both ends)

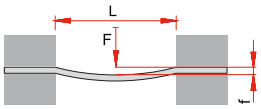

$$M_{bmax} = \frac{F \cdot L}{8}$$

$$f = \frac{F \cdot L^3}{192 \cdot E \cdot I_{x,y}}$$

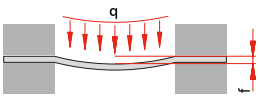

$$M_{bmax} = \frac{q \cdot L^2}{12}$$

$$f = \frac{q \cdot L^4}{384 \cdot E \cdot I_{x,y}}$$

Load scenario 3 (profile clamped at one end)

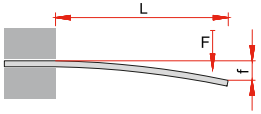

$$M_{bmax} = F \cdot L$$

$$f = \frac{F \cdot L^3}{3 \cdot E \cdot I_{x,y}}$$

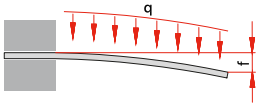

$$M_{bmax} = \frac{q \cdot L^2}{2}$$

$$f = \frac{q \cdot L^4}{8 \cdot E \cdot I_{x,y}}$$

Standards and Basic Information

The profiles are made from extruded aluminium and are available in a standard length of 5100 mm. They can also be cut to length. Lengths in excess of the standard length are available on request. All construction profiles are pretreated with the E6 chemical process, which removes grooves and scratches in the surface. The profiles are anodised with a coating that is approx. 10 µm thick and with colour C0 (natural colour). The coating is resistant to acids and bases (alkali bases up to pH 9.5 and acids up to pH 4).

Profile structures are typically suitable for indoor use at temperatures from +10° to +60° C and a humidity of 30 to 60%. Low temperatures down to -20° C are possible on request. Temperatures above 80° C are only briefly permissible for most plastics. Ambient temperatures higher than 150° C are only permissible for aluminium base structures after testing. The values shown in the table below are the highest permissible deviations as specified in the standard.

Materials of mk Profiles

According to DIN EN 755-2

mk generally uses two different materials for its profile technology. AlMgSi 0.5 F25 is used for Series 25 and 40, and AlMgSi 0.7 F27 is primarily used for Series 50 and 60, which exhibits 7% higher strength.

Material name according to DIN EN 573-3 Material abbreviation according to DIN 1725-1 Material number			EN AW 6063 T66 AlMg0.7Si AlMgSi 0.5 F25 3.3206.72	EN AW 6005A T6 AlSiMg(A) AlMgSi 0.7 F27 3.3210.71
Density	ρ	g/cm³	2.7	2.7
Elastic modulus	E	N/mm²	70,000	70,000
Tensile strength	Rm	N/mm²	245	270
0.2% offset yield stress	$Rp_{0.2}$	N/mm²	200	215
Elongation at break	A5	%	8	8
Brinell hardness	HB		80	85
Coefficient of thermal expansion (up to 20° C/up to 293° K) (20°–100°C/293°–373°K)	α	1/K	$21.8^{*}10^{-6}$ $23.2^{*}10^{-6}$	$21.8^{*}10^{-6}$ $23.2^{*}10^{-6}$
Thermal conductivity	λ	W/(m*K)	200–220	180–220
Electrical conductivity (20° C/293° K)	κ	m/(Ω*mm²)	28–34	26–32

Squareness Tolerance*

Width W (mm) range over	 up to	Squareness tolerance for cross section D (mm)
–	40	0.20
40	60	0.30
60	90	0.40
90	120	0.45
120	150	0.55
150	180	0.65
180	210	0.70

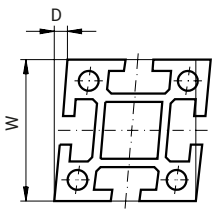

Profiles may exhibit web marks. Tolerances for flatness and contour deviations available on request.

Straightness Tolerance*

The straightness tolerance h_1 must not exceed the values in the table for a given length; the deviation must also not exceed 0.3 mm over a distance of 300 mm.

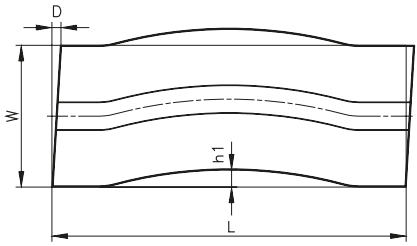

Length L	up to 1000	up to 2000	up to 3000	up to 4000	up to 5000	up to 6000	over 6000
Tolerance h_1	0.7	1.3	1.8	2.2	2.6	3	3.5

Tolerances for Cut Profiles*

Length L	up to 500	up to 1000	up to 2000	up to 6000
Tolerance	± 0.5	± 0.8	± 1.2	± 2.0
Width W	up to 50	up to 100	up to 200	up to 300
Angular tolerance D	0.2 mm	0.4 mm	0.8 mm	1.2 mm

If the length tolerances above are insufficient, optional machining of the profile face is also available.

Twisting

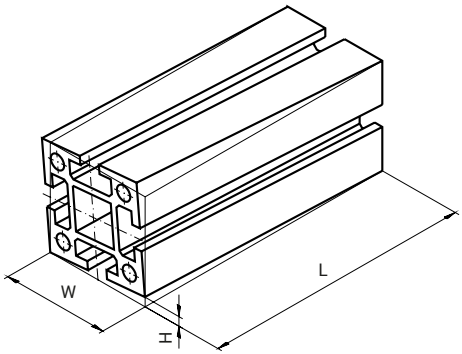

Width W		Twisting tolerance H for lengths L						
over	up to	up to 1000	over 1000 up to 2000	over 2000 up to 3000	over 3000 up to 4000	over 4000 up to 5000	over 5000 up to 6000	over 6000
–	25	1.0	1.5	1.5	2.0	2.0	2.0	As agreed
25	50	1.0	1.2	1.5	1.8	2.0	2.0	
50	75	1.0	1.2	1.2	1.5	2.0	2.0	
75	100	1.0	1.2	1.5	2.0	2.2	2.5	
100	125	1.0	1.5	1.8	2.2	2.5	3.0	
125	150	1.2	1.5	1.8	2.2	2.5	3.0	
150	200	1.5	1.8	2.2	2.6	3.0	3.5	
200	300	1.8	2.5	3.0	3.5	4.0	4.5	

* According to DIN 17615 or DIN EN 12020

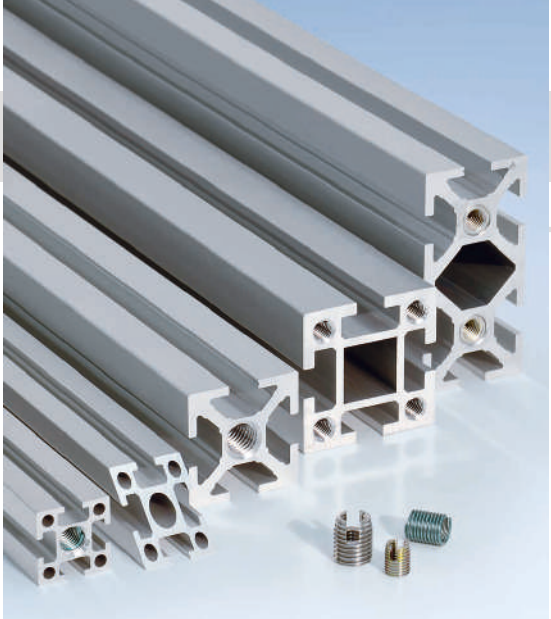

Profile Services

Overview of End Services

To achieve positive-locked connections, the ends of profiles often need to be machined. For example, bores may have to be drilled for tension plugs, or profiles may need to be mitre-cut. Below are diagrams showing the various end services options.

The subsequent section presents the most common end services option for each profile, along with the item number. Other end services options are possible and can be delivered on request.

Note
Our online shop and our CAD library lets you conveniently select and order end service options as well as the corresponding CAD data (www.aluprofil.shop).

For lateral bores, you have to indicate the positions of the bores, i.e. the particular slots:

Example for mk 2040.06 profile

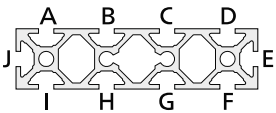

Starting point A is the slot at the top left with the profile cross-section on a long side. Further indexing is then carried out alphabetically in ascending order in a clockwise direction. You are also welcome to provide us with a drawing.

Lateral bores to the profile centre

One end

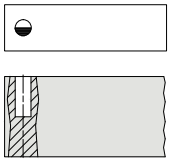

Both ends

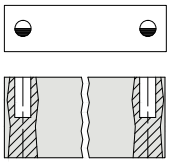

2 x on one end

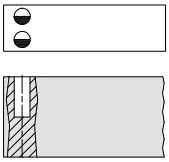

2 x on both ends

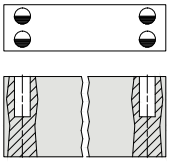

Lateral through bores

One end

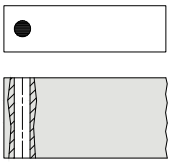

Both ends

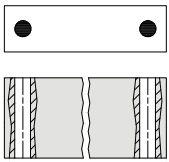

2 x on one end

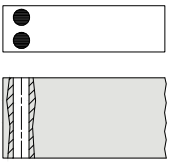

2 x on both ends

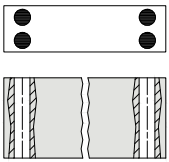

Threads, front side

One end

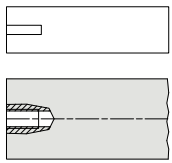

Both ends

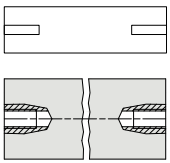

2 x or 4 x on one end

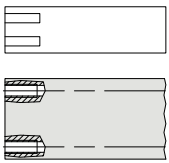

2 x or 4 x on both ends

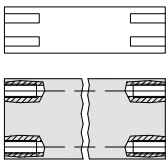

Threaded inserts, front side

One end

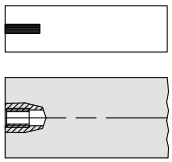

Both ends

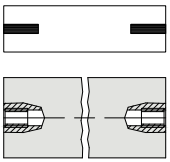

2 x or 4 x on one end

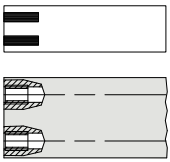

2 x or 4 x on both ends

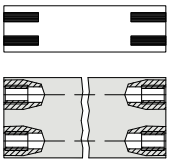

HELICOIL, front side

One end

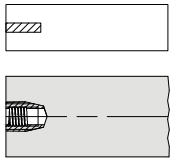

Both ends

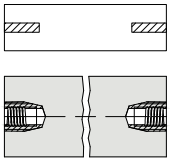

2 x or 4 x on one end

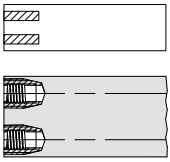

2 x or 4 x on both ends

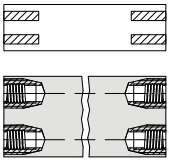

Facing

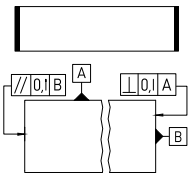

To provide a more exact right angle and a smaller length tolerance, the profile face can also be machined up to a length of 2 meters (other lengths on request).

Mitre Cutting

One end

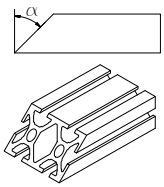

Both ends

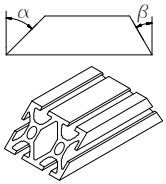

The mitre cuts included in the catalogue are always made on the long side, as shown here.

For mitre cuts on both ends, the cuts are always in opposing directions, as shown here.

Other cuts are available on request.

2

End Services Front Side

Series 25	Series 40	Series 50	Series 60
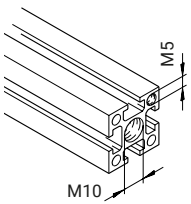	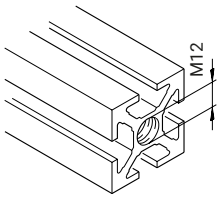	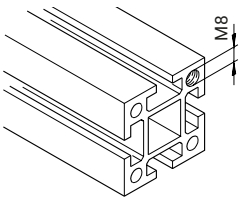	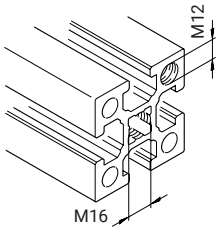
M5 or M10 thread	M12 thread M8 for extra light duty	M8 thread	M12 or M16 thread Reduced load capacity with M16 thread
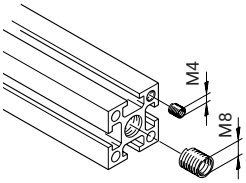	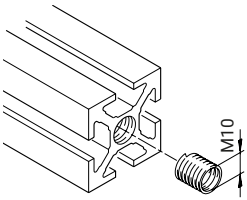	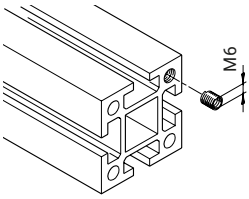	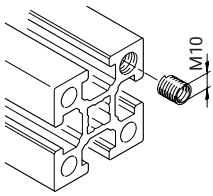
M4 HELICOIL **K112030104** M8 HELICOIL **K112030109**	M10 HELICOIL **K112030110**	M6 HELICOIL **K112030106**	M10 HELICOIL **K112030110**
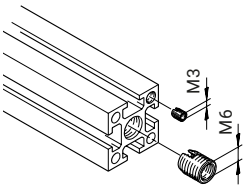	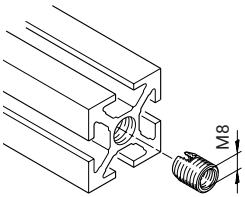	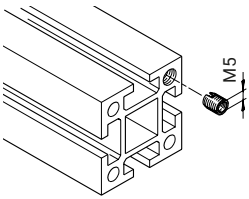	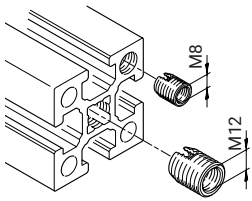
M3 threaded insert **K112030002** M6 threaded insert **K112030006**	M8 threaded insert **K112030008**	M5 threaded insert **K112030005**	M8 threaded insert **K112030008** M12 threaded insert **K112030010**

*Recommended screw depth = $2 \cdot d_N$ (nominal ø)

End Services Front Side

Below is an overview of the taps and installation tools needed for end services, as well as the necessary threaded inserts and HELICOILs. The machining can be done with a hand-held drill. The installation tools are meant to be used by hand.

Series	Bore channel ø [mm]	End Services		Tool		Thread depth [mm]
25	4.2	M5 thread		M5 tap	**K903060005**	15
25	8.5	M10 thread		M10 tap	**K903060010**	30
25	4.2	M3 threaded insert	**K112030002**	M5x0.5 mm tap, installation tool	**K903060105** **K902010004**	10
25	8.5	M6 threaded insert	**K112030006**	M9x1 mm tap, installation tool	**K903060109** **K902010010**	15
25	4.2	M4 HELICOIL	**K112030104**	M4 HELICOIL tap, installation tool	**K903060204** **K902010204**	10
25	8.5	M8 HELICOIL	**K112030109**	M8 HELICOIL tap, installation tool	**K903060208** **K902010208**	15
40 extra light duty	7.4	M8 thread		M8 forming tap	**K903070008**	20
40	10.0	M12 thread		M12 tap	**K903060012**	35
40/60	10,0/10,5	M8 threaded insert	**K112030008**	M12x1.5 mm tap, installation tool	**K903060113** **K902010012**	20
40/60	10,0/10,5	M10 HELICOIL	**K112030110**	M10 HELICOIL tap, installation tool	**K903060210** **K902010210**	20
50	7.0	M8 thread		M8 tap	**K903060008**	25
50	7.0	M5 threaded insert	**K112030005**	M8x1 mm tap, installation tool	**K903060108** **K902010008**	15
50	7.0	M6 HELICOIL	**K112030106**	M6 HELICOIL tap, installation tool	**K903060206** **K902010206**	15
60	10.5	M12 thread		M12 tap	**K903060012**	35
60	14.5	M16 thread		M16 tap	**K903060016**	45
60	14.5	M12 threaded insert	**K112030010**	M16x1.5 mm tap, installation tool	**K903060116** **K902010016**	25

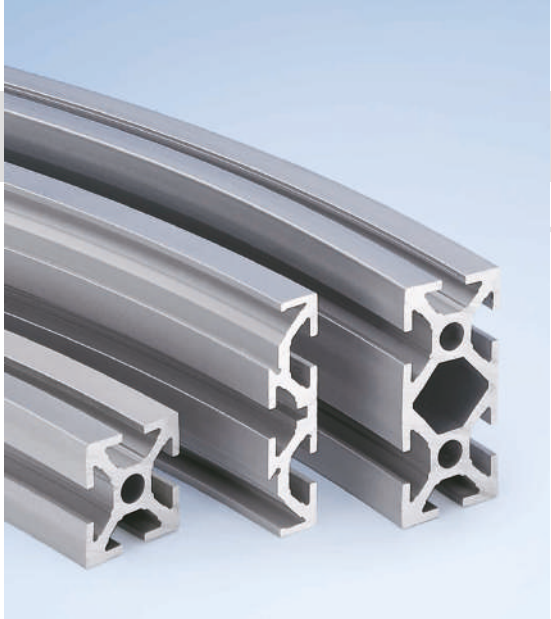

Profile Services

Curved Profiles

Certain profiles can be bent to a desired radius. Profiles with this bending option are marked with a symbol, with the number indicating the minimum inner radius (Rmin) in millimetres.

Information required for ordering

- Profile ID number
- Inner radius R
- Angle α

Rmin 150 Rmin 250 Rmin 400 ... up to Rmin 1200

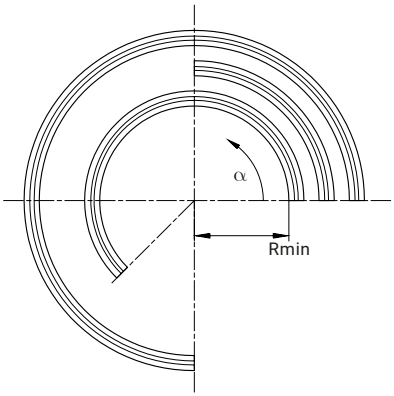

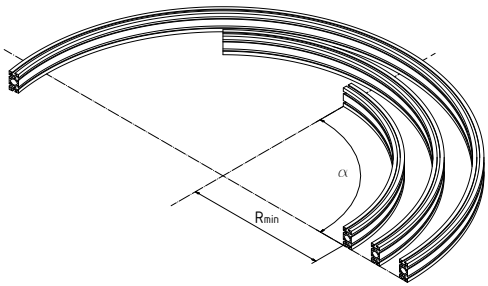

Non-square profiles can only be bent along the narrow side of the profile, i.e. in the upright orientation, as shown here. Bending will deform the cross sections slightly, so slot widths may be reduced.

The following profiles can be bent

mk 2025.01 (25x25)	on page 42
mk 2025.02 (25x50)	on page 43
mk 2025.03 (25x100)	on page 43
mk 2025.04 (25x150)	on page 43
mk 2025.22	on page 44
mk 2025.41 (20x40)	on page 46
mk 2025.42 (20x80)	on page 46
mk 2025.43 (20x120)	on page 47
mk 2025.44 (20x160)	on page 47
mk 2025.31 (25x25)	on page 48
mk 2025.35 (25x25)	on page 48
mk 2025.32 (25x50)	on page 49
mk 2025.36 (25x50)	on page 49
mk 2040.01 (40x40)	on page 51
mk 2040.02 (40x80)	on page 53
mk 2001	on page 63
mk 2000 (50x50)	on page 63
mk 2014 (50x50) light duty	on page 63
mk 2023 (50x75)	on page 64
mk 2004 (50x100)	on page 64

Notes

Overview of Profiles

Construction profile dimensions

2

Series D28 Construction Profiles

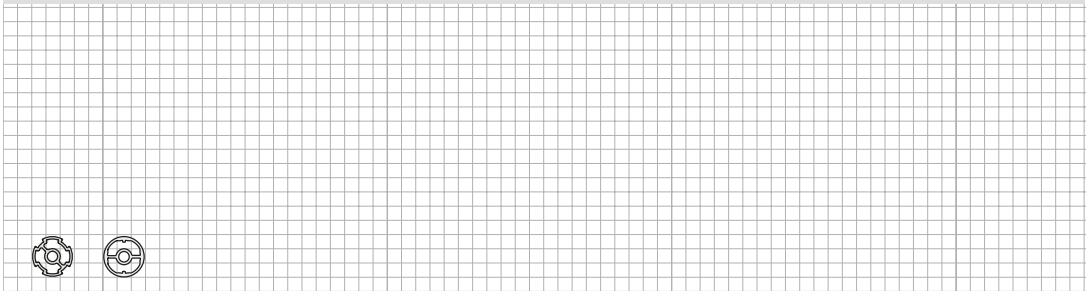

Series 25 Construction Profiles

6

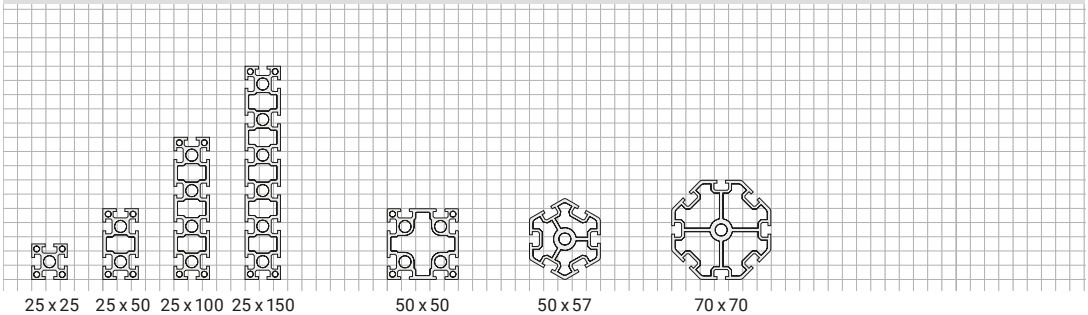

Series 25/40 Adapter Profiles

6 10

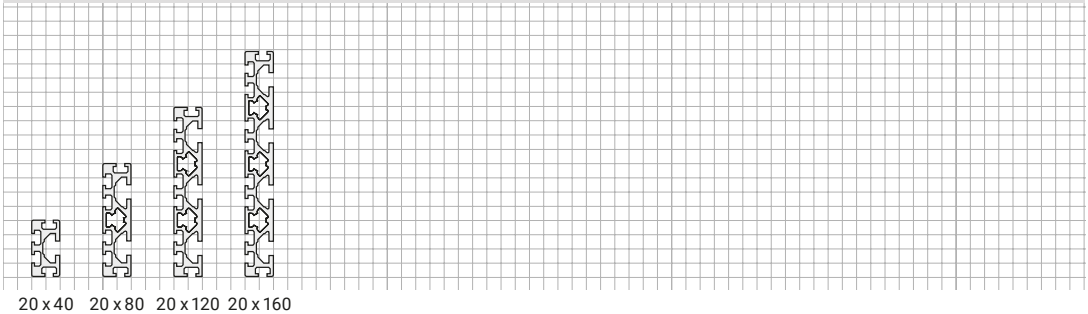

Series 40 Construction Profiles

10

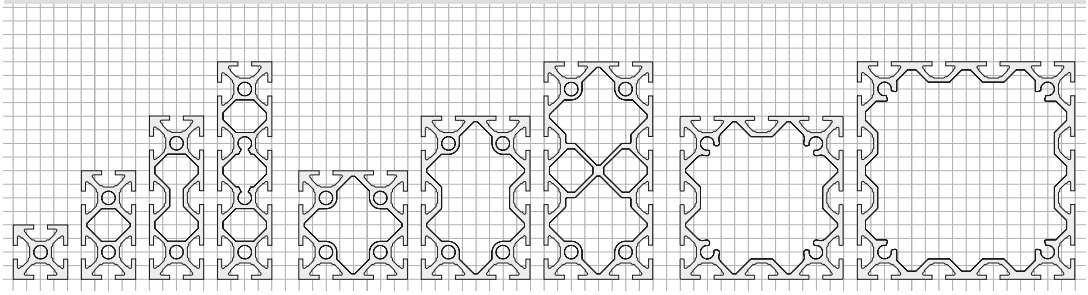

40 x 40 40 x 80 40 x 120 40 x 160 80 x 80 80 x 120 80 x 160 120 x 120 160 x 160

Series 50 Construction Profiles

10

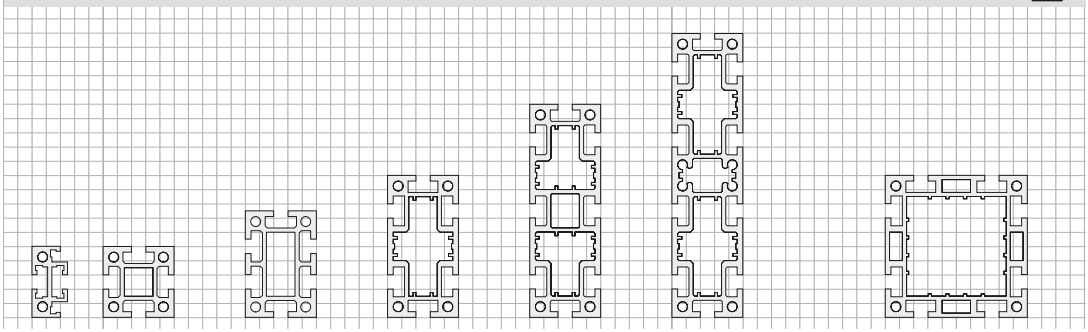

25 x 50 50 x 50 50 x 75 50 x 100 50 x 150 50 x 200 100 x 100

Series 60 Construction Profiles

14

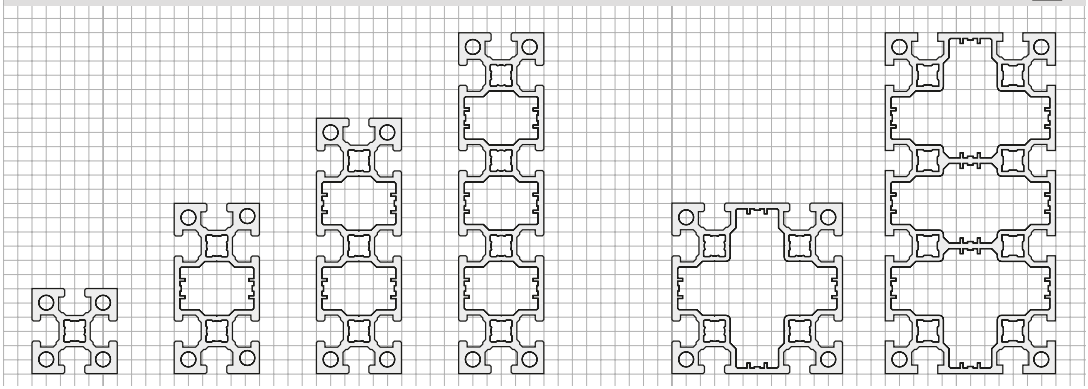

60 x 60 60 x 120 60 x 180 60 x 240 120 x 120 120 x 240

Overview of Profiles

Construction Profiles

	Area	Mass	Moments of inertia			Section moduli			
	A [mm²]	m [kg/m]	Ix [cm⁴]	Iy [cm⁴]	It [cm⁴]	Wx [cm³]	Wy [cm³]	Wp [cm³]	Page
Series D28 Profiles									
mk 2279 **52.79. ....** 	235	0.63	1.44	1.32	–	1.07	0.99	–	**40**
mk 2280 **52.80. ....** 	245	0.67	1.64	1.54	–	1.17	1.10	–	**40**
Series 25 Profiles									
mk 2025.01 (25x25) **25.01. ....** 	279	0.75	1.73	1.73	0.40	1.38	1.38	0.38	**42**
mk 2025.31 (25x25) **25.31. ....** 	284	0.77	1.73	1.62	0.46	1.42	1.29	0.32	**48**
mk 2025.35 (25x25) **25.35. ....** 	275	0.75	1.71	1.68	–	1.38	1.34	–	**48**
mk 2025.37 **25.37. ....** 	267	0.73	1.32	1.28	–	1.14	1.12	–	**49**
mk 2025.38 **25.38. ....** 	290	0.79	1.52	1.48	–	1.27	1.25	–	**49**
mk 2025.02 (25x50) **25.02. ....** 	501	1.35	12.20	3.30	2.20	4.87	2.64	1.25	**43**
mk 2025.32 (25x50) **25.32. ....** 	475	1.29	3.22	12.00	–	2.60	4.81	–	**49**
mk 2025.36 (25x50) **25.36. ....** 	462	1.25	3.12	11.90	–	2.58	4.81	–	**49**
mk 2025.39 **25.39. ....** 	407	1.10	2.05	9.44	–	1.81	3.77	–	**49**

	Area	Mass	Moments of inertia			Section moduli			
	A [mm²]	m [kg/m]	Ix [cm⁴]	Iy [cm⁴]	It [cm⁴]	Wx [cm³]	Wy [cm³]	Wp [cm³]	Page
6 Series 25 Profiles									
mk 2025.03 (25x100) **25.03. ....** 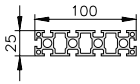	945	2.55	87.00	6.44	6.53	17.40	5.15	3.03	**43**
mk 2025.22 **25.22. ....** 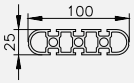	837	2.26	64.30	5.84	–	12.90	4.67	–	**44**
mk 2025.04 (25x150) **25.04. ....** 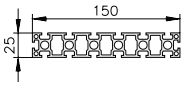	1390	3.75	280.00	9.58	11.00	37.30	7.66	4.64	**43**
mk 2025.05 (50x50) **25.05. ....** 	816	2.21	22.30	22.30	11.90	8.90	8.90	3.91	**43**
mk 2025.18 **25.18. ....** 	376	1.02	3.72	5.06	–	1.77	2.14	–	**49**
mk 2025.20 **25.20. ....** 	783	2.12	15.50	15.50	8.62	6.20	5.45	2.13	**45**
mk 2025.21 **25.21. ....** 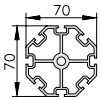	1100	2.98	43.60	43.60	27.20	12.50	12.50	5.00	**45**
6 10 Series 25/40 Adapter Profiles									
mk 2025.41 (20x40) **25.41. ....** 	377	1.02	6.20	1.49	–	3.10	1.39	–	**46**
mk 2025.42 (20x80) **25.42. ....** 	717	1.94	42.50	2.97	–	10.60	2.88	–	**46**
mk 2025.43 (20x120) **25.43. ....** 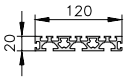	1060	2.86	136.00	4.44	–	22.70	4.37	–	**47**
mk 2025.44 (20x160) **25.44. ....** 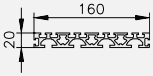	1400	3.77	315.00	5.90	–	39.30	5.86	–	**47**

Overview of Profiles

Construction Profiles

	Area	Mass	Moments of inertia			Section moduli			
	A [mm²]	m [kg/m]	Ix [cm⁴]	Iy [cm⁴]	It [cm⁴]	Wx [cm³]	Wy [cm³]	Wp [cm³]	Page
Series 40 Profiles									
mk 2040.31 (40x40) extra light duty **54.31. ....**	561	1.50	9.69	9.69	0.66	4.84	4.84	0.53	**50**
mk 2040.40 (40x40) light duty **54.40. ....**	606	1.64	10.50	10.50	0.79	5.26	5.26	0.57	**51**
mk 2040.01 (40x40) **54.01. ....**	742	2.00	12.10	12.10	1.17	6.06	6.06	0.98	**51**
mk 2040.92 (40x40) **54.92. ....**	623	1.68	11.00	10.60	1.83	5.40	5.28	0.74	**56**
mk 2040.93 (40x40) **54.93. ....**	634	1.72	11.00	11.00	2.91	5.40	5.40	1.28	**56**
mk 2040.94 (40x40) **54.94. ....**	634	1.72	11.40	10.50	3.86	5.73	5.28	1.19	**57**
mk 2040.95 (40x40) **54.95. ....**	647	1.75	11.00	11.40	6.04	5.41	5.74	1.40	**57**
mk 2040.96 (40x40) **54.96. ....**	659	1.78	11.50	11.50	–	5.74	5.74	–	**57**
mk 2040.16 **54.16. ....**	463	1.25	5.28	6.22	–	2.87	3.11	–	**57**
mk 2040.21 (40x40) **54.21. ....**	685	1.84	11.00	10.20	2.60	5.42	5.10	1.28	**59**
mk 2040.11 (40x40) **54.11. ....**	696	1.88	11.10	11.10	3.36	5.50	5.50	1.35	**59**
mk 2040.14 **54.14. ....**	604	1.62	8.30	8.30	–	4.75	4.75	–	**60**

	Area	Mass	Moments of inertia			Section moduli			
	A [mm²]	m [kg/m]	Ix [cm⁴]	Iy [cm⁴]	It [cm⁴]	Wx [cm³]	Wy [cm³]	Wp [cm³]	Page
10 Series 40 Profiles									
mk 2040.15 **54.15. ....** 	561	1.51	7.85	7.85	–	4.54	4.54	–	**60**
mk 2040.52 (40x80) extra light duty **54.52. ....** 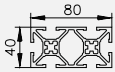	988	2.67	64.10	17.50	–	16.00	8.76	–	**52**
mk 2040.41 (40x80) light duty **54.41. ....** 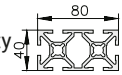	1160	2.85	68.90	18.70	6.65	17.20	9.33	2.70	**52**
mk 2040.02 (40x80) **54.02. ....** 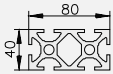	1340	3.62	83.30	22.60	12.60	20.80	11.30	5.16	**53**
mk 2040.100 (40x80) **54.100. ....** 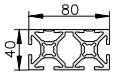	1090	2.94	70.80	19.70	12.90	17.70	9.63	2.61	**57**
mk 2040.101 (40x80) **54.101. ....** 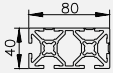	1100	2.97	72.70	19.70	14.10	18.00	9.64	2.66	**57**
mk 2040.104 (40x80) **54.104. ....** 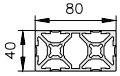	1140	3.07	75.50	20.60	30.60	18.80	10.30	3.26	**57**
mk 2040.22 (40x80) **54.22. ....** 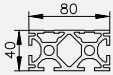	1270	3.43	75.50	21.50	18.80	18.90	10.70	3.37	**60**
mk 2040.12 (40x80) **54.12. ....** 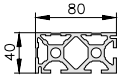	1270	3.43	77.90	21.40	22.00	19.90	10.90	2.59	**60**
mk 2040.05 (40x120) **54.05. ....** 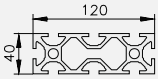	1740	4.69	257.00	31.60	19.70	43.70	15.80	6.24	**54**
mk 2040.06 (40x160) **54.06. ....** 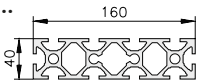	2320	6.26	576.00	41.40	37.50	72.00	20.70	11.20	**54**

Overview of Profiles

Construction Profiles

	Area	Mass	Moments of inertia			Section moduli			
	A [mm²]	m [kg/m]	Ix [cm⁴]	Iy [cm⁴]	It [cm⁴]	Wx [cm³]	Wy [cm³]	Wp [cm³]	Page
Series 40 Profiles									
mk 2040.45 (80x80) light duty **54.45. ....** 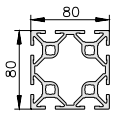	1760	4.75	127.90	128.00	53.70	31.90	31.90	9.88	**53**
mk 2040.03 (80x80) **54.03. ....** 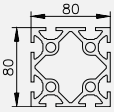	2060	5.57	150.00	150.00	88.70	37.40	37.40	12.30	**53**
mk 2040.73 (80x80) **54.73. ....** 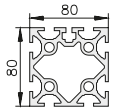	2110	5.72	150.00	150.00	80.50	37.10	37.40	12.30	**54**
mk 2040.109 (80x80) **54.109. ....** 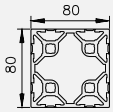	1860	5.04	138.00	138.00	145.00	34.50	34.50	7.47	**57**
mk 2040.46 (80x80) **54.46. ....** 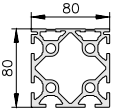	2020	5.44	145.00	146.00	79.40	35.60	36.40	9.27	**61**
mk 2040.13 (80x80) **54.13. ....** 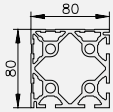	1970	5.32	142.00	142.00	–	36.00	36.00	–	**61**
mk 2040.07 (80x120) **54.07. ....** 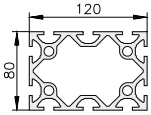	2580	6.96	441.00	208.00	146.00	73.40	52.10	18.20	**54**
mk 2040.08 (80x160) **54.08. ....** 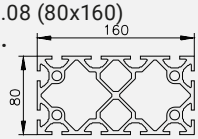	3500	9.46	949.00	272.00	321.00	119.00	68.00	29.00	**55**
mk 2040.10 (120x120) **54.10. ....** 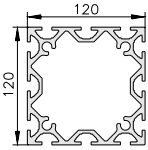	3060	8.26	585.00	585.00	312.00	97.50	97.50	31.80	**55**

	Area	Mass	Moments of inertia			Section moduli			
	A [mm²]	m [kg/m]	Ix [cm⁴]	Iy [cm⁴]	It [cm⁴]	Wx [cm³]	Wy [cm³]	Wp [cm³]	Page
10 Series 40 Profiles									
mk 2040.09 (160x160) **54.09. ....** 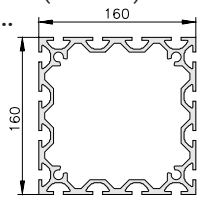	4220	11.40	–	–	–	–	–	–	**55**
mk 2040.04 **54.04. ....** 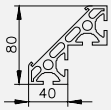	1340	3.61	71.80	71.80	6.51	18.80	18.80	3.00	**61**
mk 2040.19 **54.19. ....** 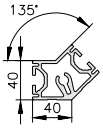	943	2.54	22.10	30.50	–	6.64	8.10	–	**61**

Overview of Profiles

Construction Profiles

	Area	Mass	Moments of inertia			Section moduli			
	A [mm²]	m [kg/m]	Ix [cm⁴]	Iy [cm⁴]	It [cm⁴]	Wx [cm³]	Wy [cm³]	Wp [cm³]	Page
Series 50 Profiles									
mk 2001 **51.01. ....** 	542	1.49	14.30	2.67	–	5.70	1.82	–	**63**
mk 2030 **51.30. ....** 	394	1.06	3.12	4.45	–	2.08	2.96	–	**63**
mk 2002 (50x50) extra light duty **51.02. ....** 	693	1.75	19.60	19.60	–	7.83	7.83	–	**63**
mk 2014 (50x50) light duty **51.14. ....** 	760	1.98	21.20	21.20	2.96	8.51	8.51	1.91	**63**
mk 2000 (50x50) **51.00. ....** 	1080	2.85	29.90	29.90	5.23	12.00	12.00	2.85	**63**
mk 2019 (50x50) **51.19. ....** 	1100	3.00	30.60	30.00	–	12.10	11.90	–	**66**
mk 2018 (50x50) **51.18. ....** 	1110	3.00	30.60	30.60	–	12.10	12.10	–	**66**
mk 2017 (50x50) **51.17. ....** 	1120	3.03	30.60	31.30	16.10	12.10	12.50	2.70	**66**
mk 2003 **51.03. ....** 	762	2.00	14.00	14.00	–	6.49	6.49	–	**63**
mk 2023 (50x75) **51.23. ....** 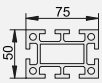	1400	3.78	89.30	39.60	–	23.80	15.80	–	**64**
mk 2004 (50x100) **51.04. ....** 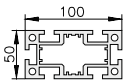	1810	4.87	200.00	55.40	24.40	40.00	22.10	6.39	**64**
mk 2006 (50x150) **51.06. ....** 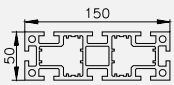	2600	7.00	597.00	80.50	49.20	79.70	32.10	13.20	**65**

	Area	Mass	Moments of inertia			Section moduli			
	A [mm²]	m [kg/m]	Ix [cm⁴]	Iy [cm⁴]	It [cm⁴]	Wx [cm³]	Wy [cm³]	Wp [cm³]	Page
10 Series 50 Profiles									
mk 2008 (50x200) **51.08. ....** 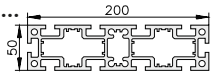	3370	9.09	1300.00	107.00	72.70	130.00	42.70	17.50	**65**
mk 2005 (100x100) light duty **51.05. ....** 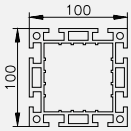	2650	7.00	335.00	335.00	153.00	67.00	67.00	18.10	**64**
mk 2011 (100x100) **51.11. ....** 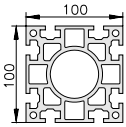	3670	9.70	383.00	383.00	226.00	76.70	76.70	26.50	**65**
mk 2009 **51.09. ....** 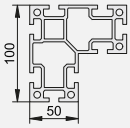	2320	6.27	239.00	239.00	–	42.00	42.00	–	**64**
mk 2072 **51.72. ....** 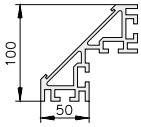	1710	4.62	152.00	152.00	–	28.70	28.70	–	**65**
mk 2031 **51.31. ....** 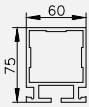	1120	2.85	79.20	55.60	–	23.20	18.50	–	**67**
mk 2033 **51.33. ....** 	554	1.50	5.22	27.70	–	4.94	9.24	–	**67**

Overview of Profiles

Construction Profiles

	Area	Mass	Moments of inertia			Section moduli			
	A [mm²]	m [kg/m]	Ix [cm⁴]	Iy [cm⁴]	It [cm⁴]	Wx [cm³]	Wy [cm³]	Wp [cm³]	Page
14 Series 60 Profiles									
mk 2060.01 (60x60) **60.01. ....** 	1600	4.31	60.20	60.20	7.18	20.00	20.00	3.05	**69**
mk 2060.02 (60x120) **60.02. ....** 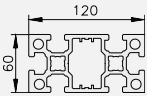	2580	6.95	404.00	103.00	50.20	67.30	34.50	9.13	**69**
mk 2060.03 (60x180) **60.03. ....** 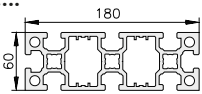	3540	9.57	1210.00	147.00	70.70	134.00	48.90	22.30	**69**
mk 2060.04 (60x240) **60.04. ....** 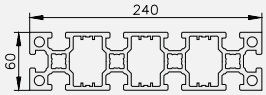	4520	12.20	2660.00	190.00	155.00	221.00	63.30	25.60	**69**
mk 2060.05 (120x120) **60.05. ....** 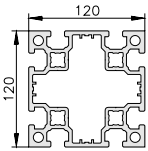	3800	10.30	660.00	660.00	225.00	110.00	110.00	31.90	**70**
mk 2060.07 (120x240) **60.07. ....** 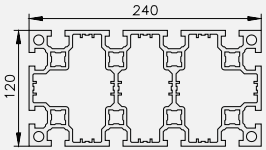	6700	18.10	4090.00	1180.00	591.00	340.00	169.00	58.30	**70**

Notes

Application Profiles

	Area	Mass	Moments of inertia			Section moduli			
	A [mm²]	m [kg/m]	Ix [cm⁴]	Iy [cm⁴]	It [cm⁴]	Wx [cm³]	Wy [cm³]	Wp [cm³]	Page
Cover Profiles									
mk 2040.43 **54.43. ....** 	151	0.41	–	–	–	–	–	–	**196**
mk 2040.42 **54.42. ....** 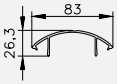	251	0.68	–	–	–	–	–	–	**196**
mk 2040.44 **54.44. ....** 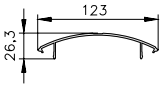	316	0.85	–	–	–	–	–	–	**196**
mk 2040.85 **54.85. ....** 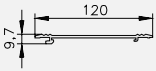	344	0.93	–	–	–	–	–	–	**197**
mk 2040.50 **54.50. ....** 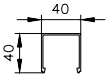	189	0.51	–	–	–	–	–	–	**202**
mk 2040.51 **54.51. ....** 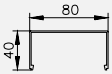	249	0.67	–	–	–	–	–	–	**202**
mk 2050 **51.50. ....** 	158	0.43	–	–	–	–	–	–	**202**
mk 2051 **51.51. ....** 	203	0.56	–	–	–	–	–	–	**202**

	Area	Mass	Moments of inertia			Section moduli			
	A [mm²]	m [kg/m]	Ix [cm⁴]	Iy [cm⁴]	It [cm⁴]	Wx [cm³]	Wy [cm³]	Wp [cm³]	Page
Closure Strips									
mk 2060.30 **60.30. ....** 	55	0.15	–	–	–	–	–	–	**156**
Profiles for Panelling									
mk 2206 **52.06. ....** 	52	0.14	–	–	–	–	–	–	**246**
mk 2207 **52.07. ....** 	102	0.28	–	–	–	–	–	–	**246**
mk 2203 **52.03. ....** 	130	0.37	–	–	–	–	–	–	**246**
mk 2210 **52.10. ....** 	93	0.25	–	–	–	–	–	–	**246**
mk 2211 **52.11. ....** 	174	0.47	–	–	–	–	–	–	**246**
mk 2214 **52.14. ....** 	91	0.25	–	–	–	–	–	–	**246**
mk 2215 **52.15. ....** 	174	0.47	–	–	–	–	–	–	**246**
mk 2040.60 **54.60. ....** 	120	0.32	–	–	–	–	–	–	**251**
mk 2220 **52.20. ....** 	119	0.32	–	–	–	–	–	–	**253**

Application Profiles

	Area	Mass	Moments of inertia			Section moduli			
	A [mm²]	m [kg/m]	Ix [cm⁴]	Iy [cm⁴]	It [cm⁴]	Wx [cm³]	Wy [cm³]	Wp [cm³]	Page
Profiles for Industrial Workstations									
mk 2040.36 **54.36. ....** 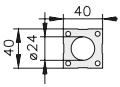	1050	2.83	17.50	17.50	27.20	8.75	8.75	8.02	**316**
mk 2040.37 **54.37. ....** 	426	1.17	2.74	14.60	–	1.09	9.73	–	**317**
mk 2040.38 **54.38. ....** 	933	2.52	43.10	32.40	26.00	13.60	13.00	3.65	**317**
mk 2040.39 **54.39. ....** 	1110	3.00	49.90	49.90	28.60	16.30	16.30	4.18	**317**
mk 2040.74 **54.74. ....** 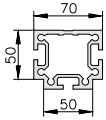	1300	3.50	74.30	56.40	32.80	21.20	18.70	4.83	**317**
mk 2040.75 **54.75. ....** 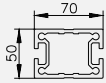	1120	3.01	68.40	38.60	30.80	27.30	11.00	4.04	**317**
mk 2040.23 **54.23. ....** 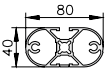	785	2.12	42.60	12.00	–	10.70	5.90	–	**318**
mk 2040.34 **54.34. ....** 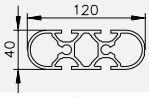	1310	3.56	140.00	24.10	28.30	23.50	12.00	4.67	**318**
mk 2040.30 **54.30. ....** 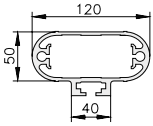	1590	4.29	234.00	67.10	–	39.10	21.30	–	**318**
mk 2040.33 **54.33. ....** 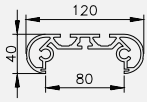	1170	3.15	162.00	14.00	–	27.30	9.66	–	**318**
mk 2040.70 **54.70. ....** 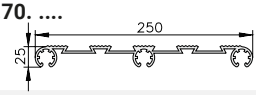	1310	3.53	–	–	–	–	–	–	**319**
mk 2040.35 **54.35. ....** 	593	1.60	19.20	3.16	–	6.40	2.50	–	**318**

	Area	Mass	Moments of inertia			Section moduli			
	A [mm²]	m [kg/m]	Ix [cm⁴]	Iy [cm⁴]	It [cm⁴]	Wx [cm³]	Wy [cm³]	Wp [cm³]	Page
Profiles for Sliding Doors and Windows									
mk 2240 **52.40. ....** 	173	0.47	–	–	–	–	–	–	**237**
mk 2241 **52.41. ....** 	248	0.67	–	–	–	–	–	–	**237**
mk 2245 **52.45. ....** 	569	1.54	14.40	12.70	–	4.86	6.33	–	**226/ 303**
mk 2244 **52.44. ....** 	321	0.87	–	–	–	–	–	–	**277**
Profiles for Stairs and Platforms									
mk 2040.68 **54.68. ....** 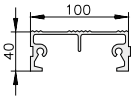	878	2.37	–	14.2	–	–	8.71	–	**327**
mk 2040.69 **54.69. ....** 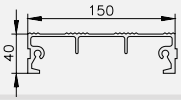	1063	2.87	–	16.8	–	–	11.74	–	**327**

Overview of Profiles

Application Profiles

	Area	Mass	Moments of inertia			Section moduli			
	A [mm²]	m [kg/m]	Ix [cm⁴]	Iy [cm⁴]	It [cm⁴]	Wx [cm³]	Wy [cm³]	Wp [cm³]	Page
Profiles for Conveyor Technology*									
mk 2075 **51.75. ....** 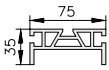	830	2.24	49.60	6.81	–	13.20	5.34	–	**CT**
mk 2100 **51.76. ....** 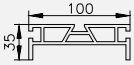	980	2.65	103.00	8.00	–	20.60	6.49	–	**CT**
mk 2150 **51.77. ....** 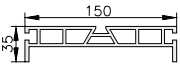	1370	3.70	607.00	10.50	–	40.90	8.97	–	**CT**
mk 2045.41 **45.41. ....** 	563	1.52	11.20	11.20	–	5.00	5.00	–	**CT**
mk 2045.42 **45.42. ....** 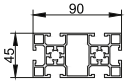	956	2.58	79.20	19.80	–	17.60	8.80	–	**CT**
mk 2026 **51.26. ....** 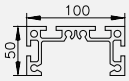	1310	3.56	172.00	32.80	–	34.50	10.30	–	**CT**
mk 2027 **51.27. ....** 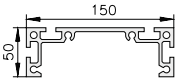	1520	4.10	476.00	37.40	–	63.50	11.00	–	**CT**
mk 2007 **51.07. ....** 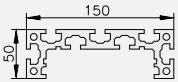	2381	6.42	622.00	48.70	5.07	83.00	27.40	4.02	**CT**
mk 2028 **51.28. ....** 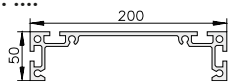	1710	4.64	969.00	40.90	–	96.90	11.50	–	**CT**
mk 2024 **51.24. ....** 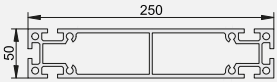	3140	8.48	2210.00	121.00	–	177.00	48.70	–	**CT**
mk 2251 **52.51. ....** 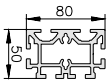	1340	3.62	81.80	35.80	–	20.40	13.30	–	**CT**
mk 2040.80 **54.80. ....** 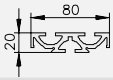	679	1.83	2.40	36.30	–	2.76	9.06	–	**CT**

* See conveyor technology catalogue (CT)

	Area	Mass	Moments of inertia			Section moduli			
	A [mm²]	m [kg/m]	Ix [cm⁴]	Iy [cm⁴]	It [cm⁴]	Wx [cm³]	Wy [cm³]	Wp [cm³]	Page
Profiles for Conveyor Technology*									
mk 2040.86 **54.86. ....** 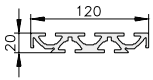	1074	2.90	122.00	4.12	–	20.3	4.47	–	**CT**
mk 2010 **51.10. ....** 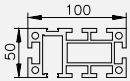	1800	4.87	193.00	51.40	10.60	38.30	19.90	4.89	**CT**
mk 2012 **51.12. ....** 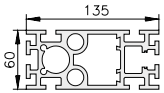	2840	7.67	502.00	118.00	68.40	71.90	39.40	10.20	**CT**
mk 2254 **52.54. ....** 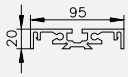	767	2.08	56.60	2.88	–	11.90	2.44	–	**CT**
mk 2065 **51.65. ....** 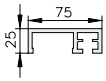	627	1.68	39.80	4.23	–	11.70	4.63	–	**CT**
mk 2066 **51.66. ....** 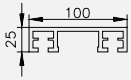	877	2.36	98.70	6.15	–	19.70	6.40	–	**CT**
mk 2255 **52.55. ....** 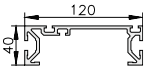	906	2.45	182.00	16.50	–	29.00	6.27	–	**CT**
mk 2086 **51.86. ....** 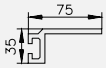	616	1.64	–	–	–	–	–	–	**CT**
mk 2060 **51.60. ....** 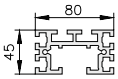	1245	3.24	88.10	25.80	–	22.00	12.50	–	**CT**
mk 2061 **51.61. ....** 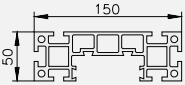	2280	6.17	595.00	57.60	25.90	79.30	26.30	8.76	**CT**
mk 2238 **52.38. ....** 	148	0.40	–	–	–	–	–	–	**CT**
mk 2239 **52.39. ....** 	138	0.37	–	–	–	–	–	–	**CT**
mk 2260 **52.60. ....** 	428	1.16	1.75	7.5	–	1.36	3.54	–	**CT**

* See conveyor technology catalogue (CT)

Series D28 Profiles

Basic Profiles

Series D28 round tube profiles have a diameter of 28 mm and a centre bore channel of 7.4 mm. They are compatible with mk Series 40 profiles and can be connected with an adapter or tension plug. They can be used for constructing equipment such as lightweight frames, supply trolleys, shelves or extensions for workstations.

Material: Anodised aluminium

Series D28 connectors starting on page 132
End caps starting on page 150

Fastening example

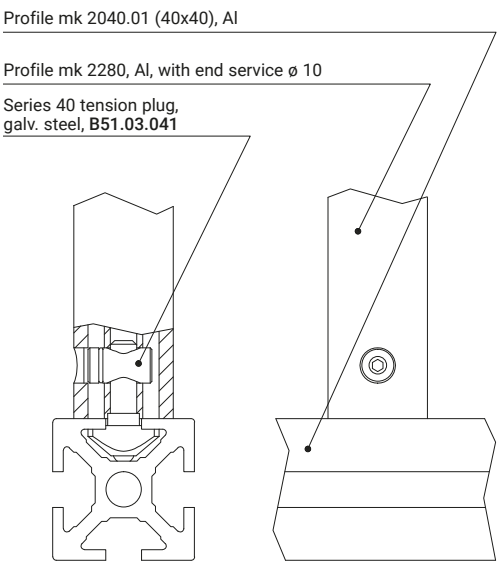

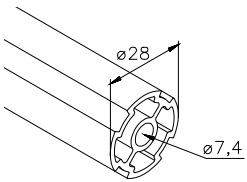

Profile mk 2279	
0.63 kg/m	
	Item no.
Stock length	**52.79.5100**
Cut	**52.79. ....**
End service	
ø 10	**5279BV....**
ø 10	**5279BW....**
M8 formed	**5279AA....**
M8 formed	**5279AB....**

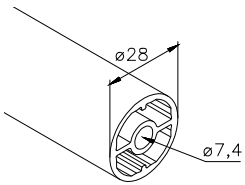

Profile mk 2280	
0.67 kg/m	
	Item no.
Stock length	**52.80.5100**
Cut	**52.80. ....**
End service	
ø 10	**5280BV....**
ø 10	**5280BW....**
M8 formed	**5280AA....**
M8 formed	**5280AB....**

Notes

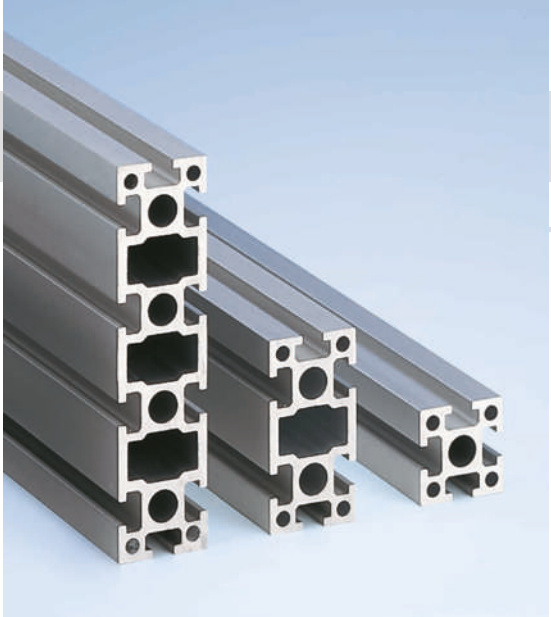

Series 25 Profiles

Basic Profiles

Series 25 profiles are based on a grid dimension of 25 x 25 mm. They are generally used for light-duty frames, cabinets, test set-ups, measurement and test units, as well as electronics housings. The slot width of 6 mm and slot depth of 6.5 mm are designed for use with DIN M5 screws. However, M4 and M6 screws can also be used. The profile's bore channels are designed for tapping threads or for inserting a threaded insert or HELICOIL.

Material: Anodised aluminium

End caps
starting on page 150

Example of fastening with an angle

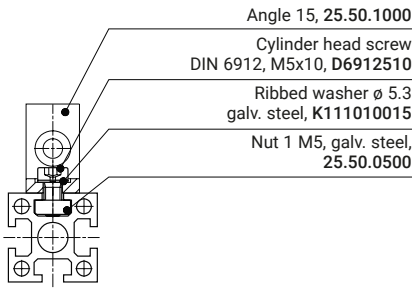

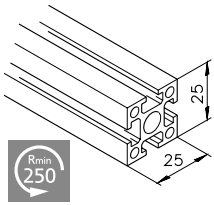

Profile mk 2025.01 (25x25)

0.75 kg/m

		Item no.
Stock length		**25.01.5100**
Cut		**25.01. ....**
End service		
	α	**2501AE....**
	α and β	**2501AF....**
	ø 5,8	**2501BA....**
	ø 5,8	**2501BB....**
	M10	**2501AA....**
	M10	**2501AB....**
	4 x M5	**2501AD....**
	M6	**B25.01.002....**
	M8	**B25.01.011....**

Standard profile dimensions

Example of mk 2025.01 (25x25)

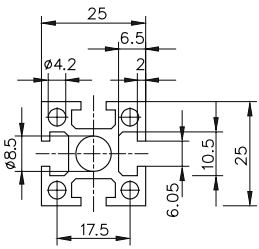

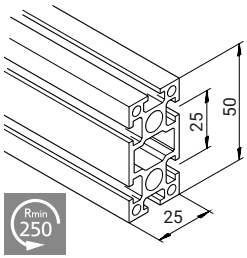

Profile mk 2025.02
(25x50)

1.35 kg/m

		Item no.
Stock length		**25.02.5100**
Cut		**25.02. ....**
End service		
	α and β	**2502AF....**
	ø 5,8	**2502BA....**
	ø 5,8	**2502BB....**
	M10	**2502AC....**
	M10	**2502AD....**
	M6	**B25.02.002....**
	M8	**B25.02.011....**

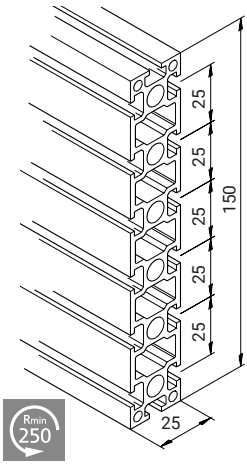

Profile mk 2025.04
(25x150)

3.75 kg/m

	Item no.
Stock length	**25.04.5100**
Cut	**25.04. ....**

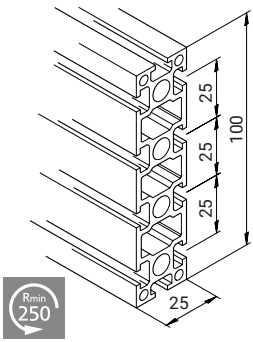

Profile mk 2025.03
(25x100)

2.55 kg/m

	Item no.
Stock length	**25.03.5100**
Cut	**25.03. ....**

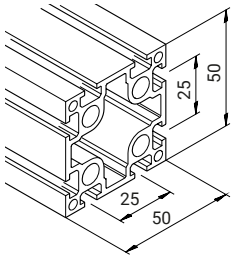

Profile mk 2025.05
(50x50)

2.21 kg/m

		Item no.
Stock length		**25.05.5100**
Cut		**25.05. ....**
End service		
	α and β	**2505AF....**
	4 x M6	**B25.05.002....**

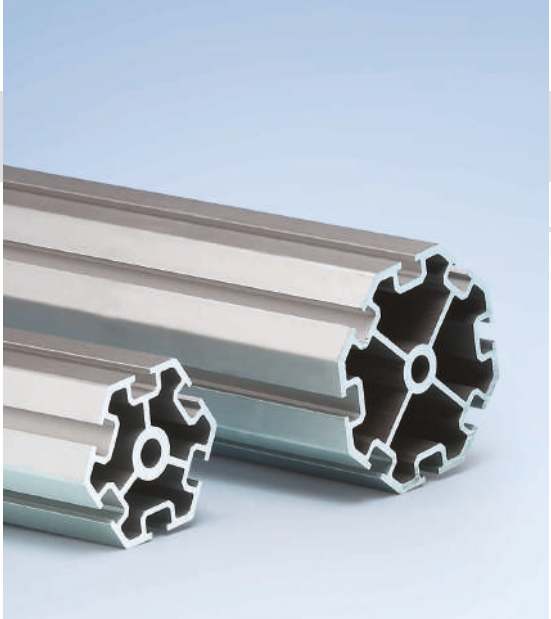

Series 25 Profiles

Basic Profiles

Typical applications include trade fair construction, variable partitions, frames or applications where the profiles need to be 45° or 60° apart.

Material: Anodised aluminium

End caps
starting on page 150

Example of fastening with a tension plug

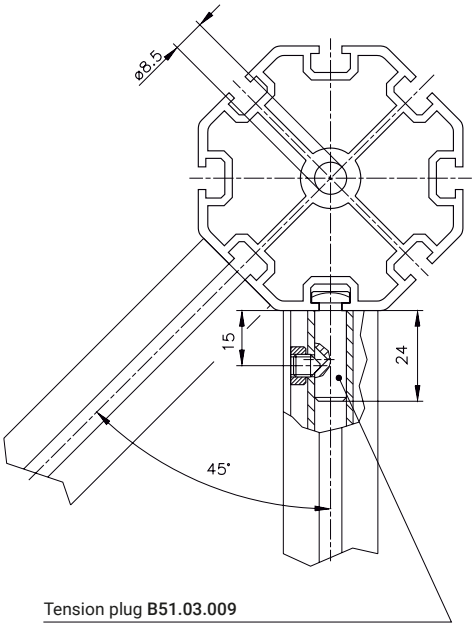

Tension plug **B51.03.009**

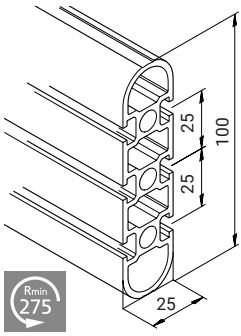

Profile mk 2025.22	
2.26 kg/m	
	Item no.
Stock length	**25.22.5100**
Cut	**25.22. ....**

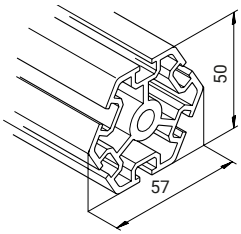

Profile mk 2025.20

2.12 kg/m

		Item no.
Stock length		**25.20.5100**
Cut		**25.20. ....**
End service		
	M10	**2520AB....**
	M6	**B25.20.002....**
	M8	**B25.20.011....**

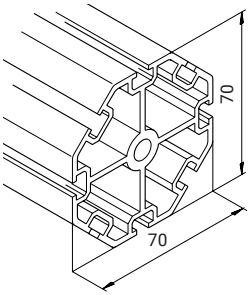

Profile mk 2025.21

2.98 kg/m

		Item no.
Stock length		**25.21.5100**
Cut		**25.21. ....**
End service		
	M10	**2521AB....**
	M6	**B25.21.002....**
	M8	**B25.21.011....**

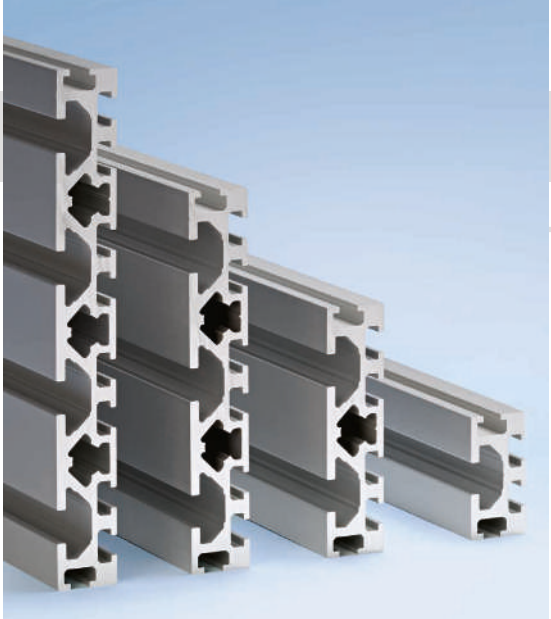

Series 25 Profiles

Series 25/40 Adapter Profiles

One side of the profile has a slot width of 6 mm for Series 25 and the other has a slot width of 10 mm for Series 40. Applications include base plates for laboratory benches or test set-ups as well as general structures that combine Series 25 and 40 profiles.

Material: Anodised aluminium

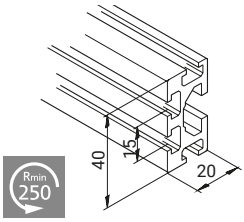

Profile mk 2025.41 (20x40)

1.02 kg/m

	Item no.
Stock length	**25.41.5100**
Cut	**25.41. ....**

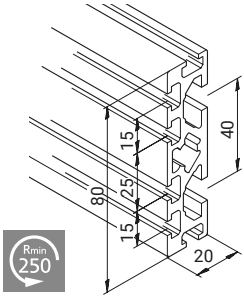

Profile mk 2025.42 (20x80)

1.94 kg/m

	Item no.
Stock length	**25.42.5100**
Cut	**25.42. ....**
End service	
M8	**B25.42.002....**

Standard dimensions

with threaded insert

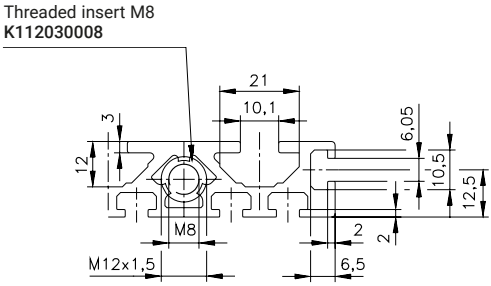

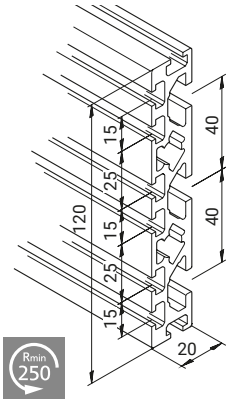

Profile mk 2025.43
(20x120)

2.86 kg/m

	Item no.
Stock length	**25.43.5100**
Cut	**25.43. ....**
End service	
2 x M8	**B25.43.002....**

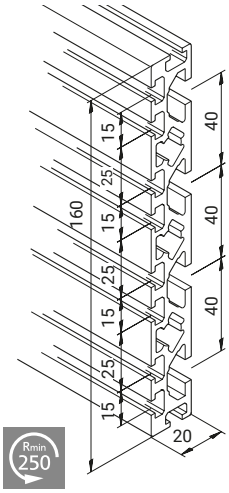

Profile mk 2025.44
(20x160)

3.77 kg/m

	Item no.
Stock length	**25.44.6200**
Cut	**25.44. ....**
End service	
3 x M8	**B25.44.002....**

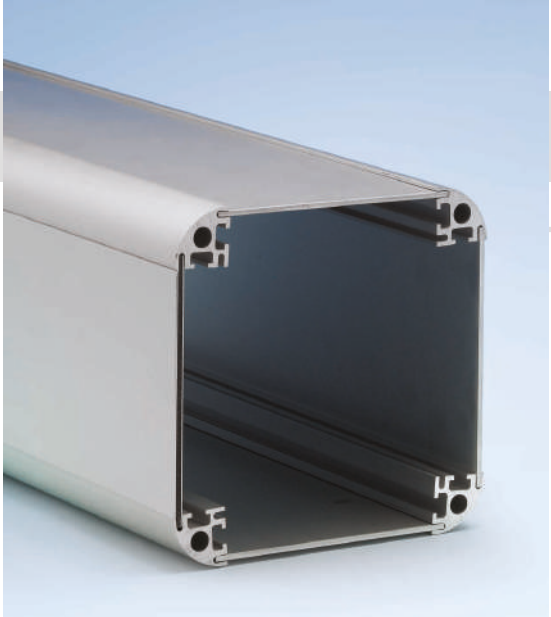

Series 25 Profiles

Profiles for Fastening Panelling

mk Series 25 profiles with closed slots have, in addition to the system slot, a second, smaller slot for attaching panelling.

For the bendable profiles listed here, bending will reduce the slot width.

Material: Anodised aluminium

End caps
starting on page 150

Example of fastening with panelling

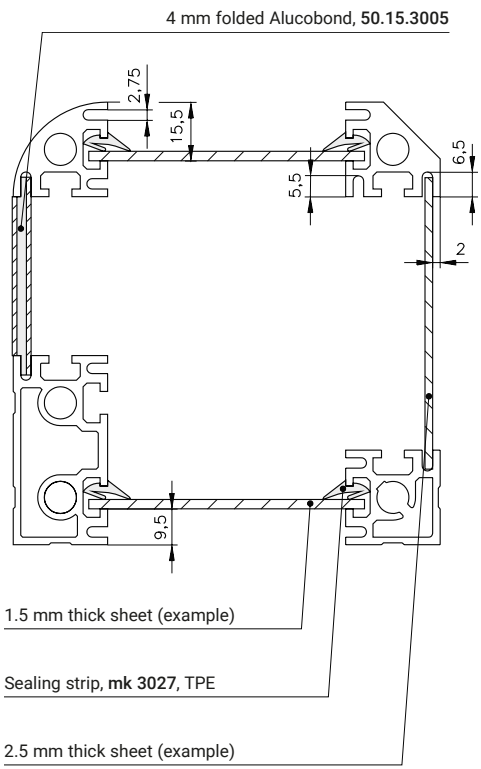

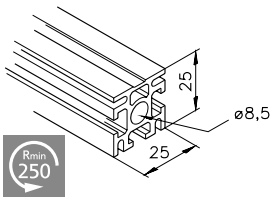

Profile mk 2025.31 (25x25)

0.77 kg/m

		Item no.
Stock length		**25.31.5100**
Cut		**25.31. ....**
End service		
	ø 5,8	**2531BA....**
	ø 5,8	**2531BB....**
	M6	**B25.31.002....**

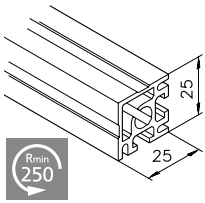

Profile mk 2025.35 (25x25)

0.75 kg/m

		Item no.
Stock length		**25.35.5100**
Cut		**25.35. ....**
End service		
	ø 5,8	**2535BB....**
	M6	**B25.35.002....**

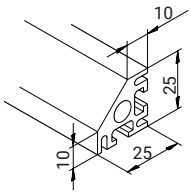

Profile mk 2025.38

0.79 kg/m

	Item no.
Stock length	**25.38.5100**
Cut	**25.38. ....**
End service	
ø 5,8	**2538BB....**
M6	**B25.38.002....**

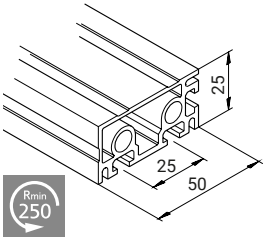

Profile mk 2025.36 (25x50)

1.25 kg/m

	Item no.
Stock length	**25.36.5100**
Cut	**25.36. ....**
End service	
ø 5,8	**2536BB....**
M6	**B25.36.002....**

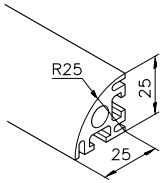

Profile mk 2025.37

0.73 kg/m

	Item no.
Stock length	**25.37.5100**
Cut	**25.37. ....**
End service	
ø 5,8	**2537BB....**
M6	**B25.37.002....**

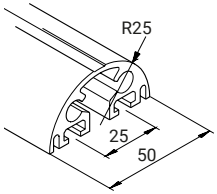

Profile mk 2025.39

1.1 kg/m

	Item no.
Stock length	**25.39.5100**
Cut	**25.39. ....**
End service	
ø 5,8	**2539BB....**
M6	**B25.39.002....**

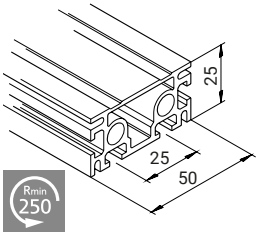

Profile mk 2025.32 (25x50)

1.29 kg/m

	Item no.
Stock length	**25.32.5100**
Cut	**25.32. ....**
End service	
ø 5,8	**2532BB....**
M6	**B25.32.004....**

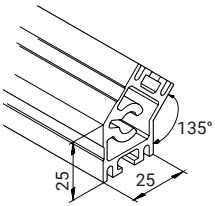

Profile mk 2025.18

1.02 kg/m

	Item no.
Stock length	**25.18.5100**
Cut	**25.18. ....**

Series 40 Profiles

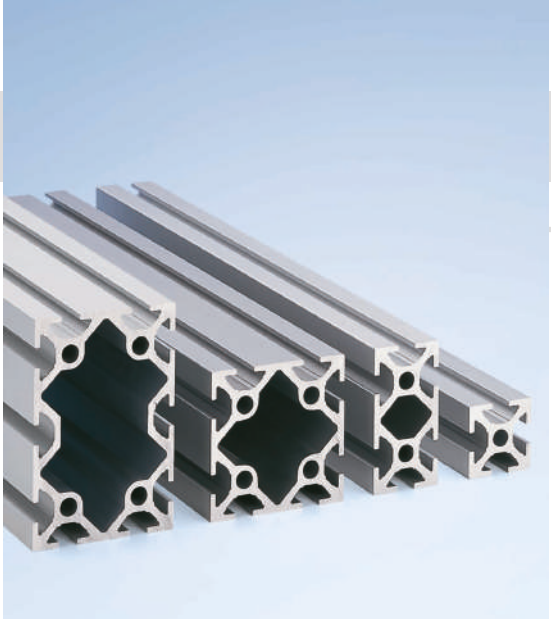

Basic Profiles

Series 40 profiles are based on a grid dimension of 40 x 40 mm. They are generally used for moderate to light-duty machine frames, guarding, assembly work stations, exhibit construction and work platforms. The slot width of 10 mm and slot depth of 12 mm are designed for use with DIN M8 screws. However, M4, M5 and M6 screws can also be used. The profile's bore channels are designed for tapping threads or for inserting a threaded insert or HELICOIL.

Material: Anodised aluminium

End caps
starting on page 150

Example of fastening with an angle

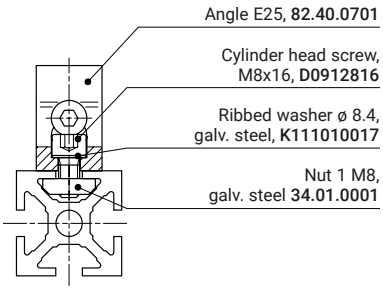

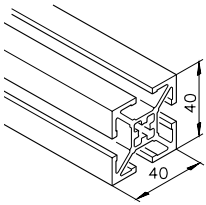

Profile mk 2040.31 (40x40) extra light duty

1.50 kg/m

		Item no.
Stock length		**54.31.5100**
Cut		**54.31. ....**
End service		
	α and β	**5431AF....**
	ø 10	**5431BV....**
	ø 10	**5431BW....**
	M8 formed	**5431AA....**
	M8 formed	**5431AB....**

Standard profile dimensions

Example of mk 2040.01 (40x40)

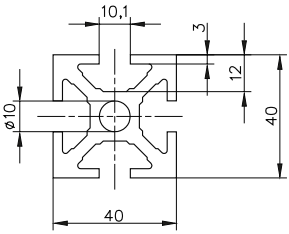

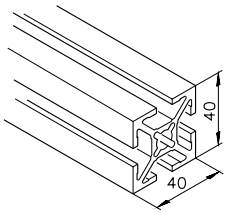

Profile mk 2040.40 (40x40) light duty

1.64 kg/m

		Item no.
Stock length		**54.40.5100**
Cut		**54.40. ....**
End service		
		5440AI....
	α and β	**5440AC....**
	ø 10	**5440BA....**
	ø 10	**5440BB....**
	ø 10	**5440BV....**
	ø 10	**5440BW....**
	ø 14	**5440BY....**
	ø 14	**5440BZ....**
	M12	**5440AA....**
	M12	**5440AB....**
	M8	**B54.40.002....**
	M8	**B54.40.001....**
	M10	**B54.40.004....**
	M10	**B54.40.005....**

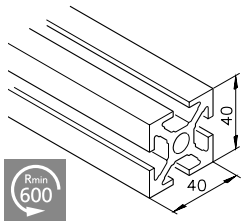

Profile mk 2040.01 (40x40)

2.00 kg/m

		Item no.
Stock length		**54.01.5100**
Stock length		**54.01.6100**
Cut		**54.01. ....**
End service		
		5401AI....
	α	**5401AE....**
	α and β	**5401AF....**
	ø 10	**5401BA....**
	ø 10	**5401BB....**
	ø 10	**5401BV....**
	ø 10	**5401BW....**
	ø 14	**5401BY....**
	ø 14	**5401BZ....**
	M12	**5401AA....**
	M12	**5401AB....**
	M8	**B54.01.003....**
	M8	**B54.01.002....**
	M10	**B54.01.001....**
	M10	**B54.01.007....**

End caps
starting on page 150

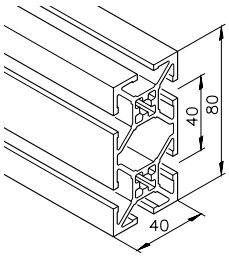

Profile mk 2040.52
(40x80) extra light duty

2.67 kg/m

		Item no.
Stock length		**54.52.5100**
Cut		**54.52. ....**
End service		
	α and β	**5452AH....**
	ø 10	**5452BV....**
	ø 10	**5452BW....**
	M8 formed	**5452AA....**
	M8 formed	**5452AB....**

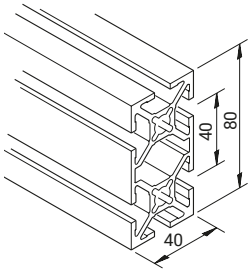

Profile mk 2040.41
(40x80) light duty

2.85 kg/m

		Item no.
Stock length		**54.41.5100**
Cut		**54.41. ....**
End service		
		5441AI....
	α and β	**5441AH....**
	ø 10	**5441BA....**
	ø 10	**5441BB....**
	ø 10	**5441BV....**
	ø 10	**5441BW....**
	ø 14	**5441BY....**
	ø 14	**5441BZ....**
	M12	**5441AC....**
	M12	**5441AB....**
	M8	**B54.41.002....**
	M8	**B54.41.001....**
	M10	**B54.41.004....**
	M10	**B54.41.005....**

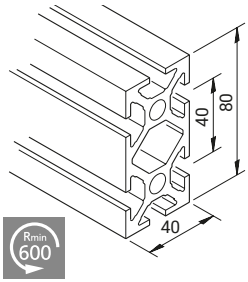

Profile mk 2040.02 (40x80)

3.62 kg/m

		Item no.
Stock length		**54.02.5100**
Stock length		**54.02.6100**
Cut		**54.02. ....**
End service		
		5402AI....
	α and β	**5402AH....**
	ø 10	**5402BA....**
	ø 10	**5402BB....**
	ø 10	**5402BV....**
	ø 10	**5402BW....**
	ø 14	**5402BY....**
	ø 14	**5402BZ....**
	M12	**5402AA....**
	M12	**5402AB....**
	M8	**B54.02.002....**
	M8	**B54.02.001....**
	M10	**B54.02.004....**
	M10	**B54.02.005....**

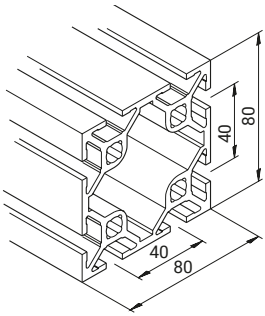

Profile mk 2040.45 (80x80) light duty

4.75 kg/m

		Item no.
Stock length		**54.45.5100**
Cut		**54.45. ....**
End service		
	α and β	**5445AF....**
	ø 14	**5445BY....**
	ø 14	**5445BZ....**
	4 x M12	**5445AA....**
	4 x M12	**5445AB....**
	4 x M8	**B54.45.002....**
	4 x M8	**B54.45.001....**

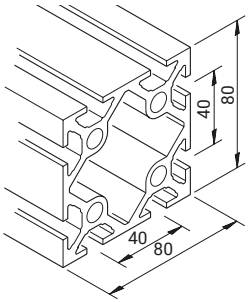

Profile mk 2040.03 (80x80)

5.57 kg/m

		Item no.
Stock length		**54.03.5100**
Stock length		**54.03.6100**
Cut		**54.03. ....**
End service		
	α and β	**5403AF....**
	ø 14	**5403BY....**
	ø 14	**5403BZ....**
	4 x M12	**5403AA....**
	4 x M12	**5403AB....**
	4 x M8	**B54.03.002....**
	4 x M8	**B54.03.001....**

End caps
starting on page 150

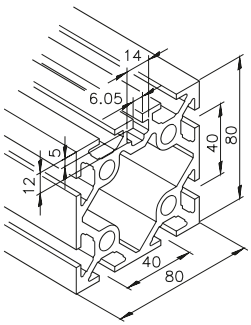

Profile mk 2040.73
(80x80)

5.72 kg/m

	Item no.
Stock length	**54.73.5100**
Cut	**54.73. ....**

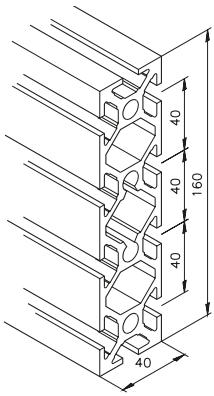

Profile mk 2040.06
(40x160)

6.26 kg/m

		Item no.
Stock length		**54.06.5100**
Cut		**54.06. ....**
End service		
	ø 10	**5406BB....**
	ø 14	**5406BY....**
	ø 14	**5406BZ....**
	M8	**B54.06.001....**

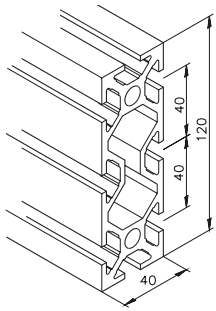

Profile mk 2040.05
(40x120)

4.69 kg/m

		Item no.
Stock length		**54.05.5100**
Cut		**54.05. ....**
End service		
	α	**5405AG....**
	ø 10	**5405BB....**
	ø 10	**5405BV....**
	ø 14	**5405BY....**
	ø 14	**5405BZ....**
	M8	**B54.05.001....**

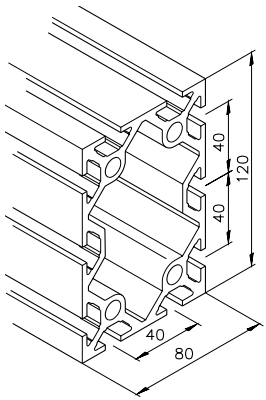

Profile mk 2040.07
(80x120)

6.96 kg/m

		Item no.
Stock length		**54.07.5100**
Stock length		**54.07.7500**
Cut		**54.07. ....**
End service		
	ø 14	**5407BY....**
	ø 14	**5407BZ....**
	4 x M8	**B54.07.001....**

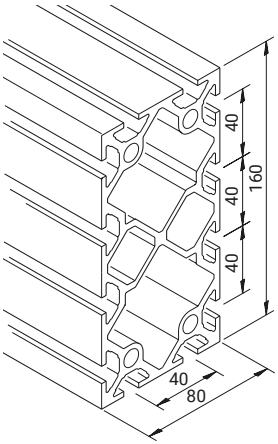

Profile mk 2040.08
(80x160)

9.46 kg/m

	Item no.
Stock length	**54.08.5100**
Stock length	**54.08.6100**
Cut	**54.08. ....**
End service	
ø 14	**5408BY....**
ø 14	**5408BZ....**
4 x M8	**B54.08.001....**

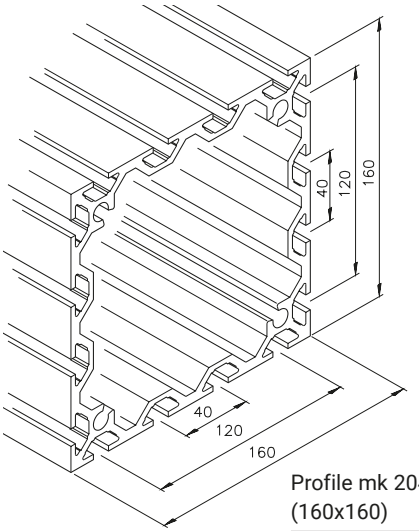

Profile mk 2040.09
(160x160)

11.40 kg/m

	Item no.
Stock length	**54.09.5100**
Cut	**54.09. ....**
End service	
4 x M8	**B54.09.001....**

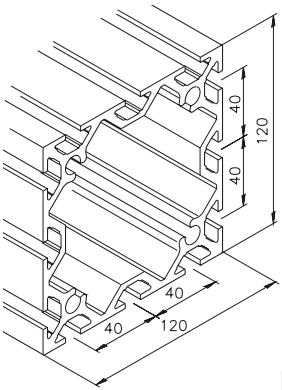

Profile mk 2040.10
(120x120)

8.26 kg/m

	Item no.
Stock length	**54.10.5100**
Cut	**54.10. ....**
End service	
4 x M8	**B54.10.001....**

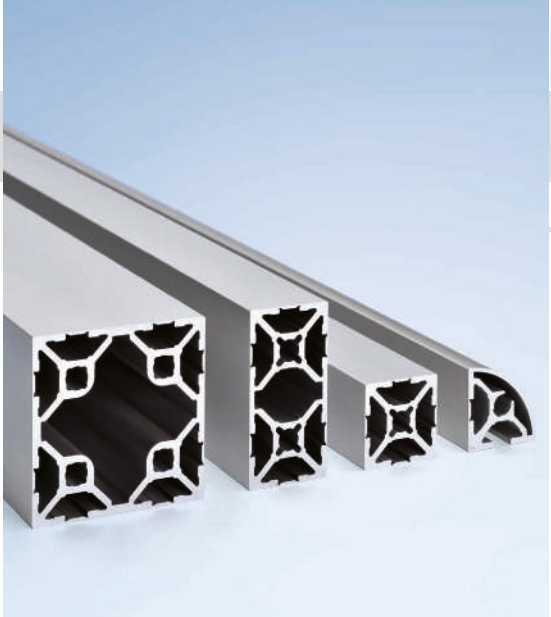

Series 40 Profiles

Cleanroom Profiles

mk cleanroom profiles feature a smooth and uninterrupted surfaces that prevents dirt from accumulating. This makes the profiles ideally suited for environments that place stringent requirements on cleanliness or design. The typical mk edge radius of only 1 mm ensures smooth connections between profiles without any gaps or spaces. The profiles' slots can be opened if necessary.

Material: Anodised aluminium

End caps
starting on page 150

Fastening example

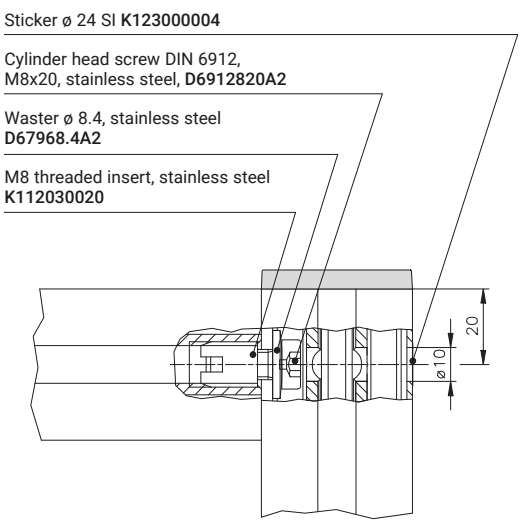

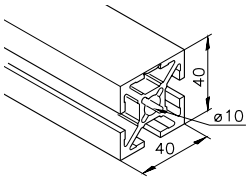

Profile mk 2040.92 (40x40)	
1.68 kg/m	
	Item no.
Stock length	**54.92.5100**
Cut	**54.92. ....**
End service	
ø 10	**5492BV....**
ø 10	**5492BW....**
ø 14	**5492BY....**
ø 14	**5492BZ....**

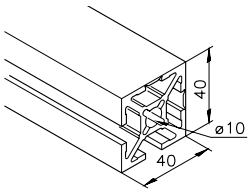

Profile mk 2040.93 (40x40)	
1.72 kg/m	
	Item no.
Stock length	**54.93.5100**
Cut	**54.93. ....**

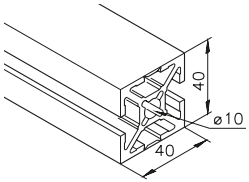

Profile mk 2040.94 (40x40)

1.72 kg/m

		Item no.
Stock length		**54.94.5100**
Cut		**54.94. ....**
End service		
	ø 10	**5494BV....**
	ø 10	**5494BW....**
	ø 14	**5494BY....**
	ø 14	**5494BZ....**

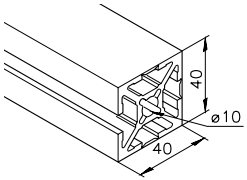

Profile mk 2040.95 (40x40)

1.75 kg/m

	Item no.
Stock length	**54.95.5100**
Cut	**54.95. ....**

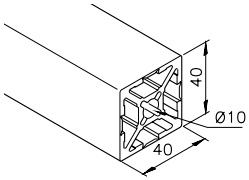

Profile mk 2040.96 (40x40)

1.78 kg/m

	Item no.
Stock length	**54.96.5100**
Cut	**54.96. ....**

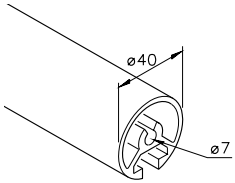

Profile mk 2040.16

1.25 kg/m

		Item no.
Stock length		**54.16.5100**
Cut		**54.16. ....**
End service		
	M8	**5416AB....**

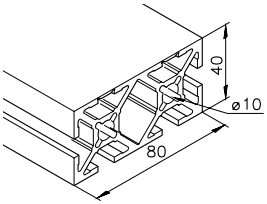

Profile mk 2040.100 (40x80)

2.94 kg/m

		Item no.
Stock length		**54.100.5100**
Cut		**54.100. ....**
End service		
	ø 10	**54100BV....**
	ø 10	**54100BW....**
	ø 14	**54100BY....**
	ø 14	**54100BZ....**

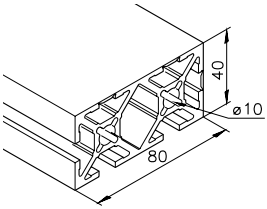

Profile mk 2040.101 (40x80)

2.97 kg/m

	Item no.
Stock length	**54.101.5100**
Cut	**54.101. ....**

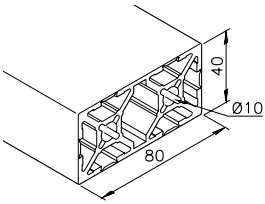

Profile mk 2040.104 (40x80)

3.07 kg/m

	Item no.
Stock length	**54.104.5100**
Cut	**54.104. ....**

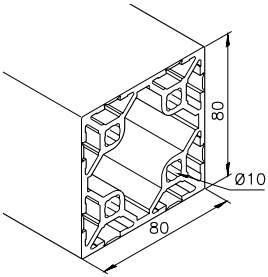

Profile mk 2040.109 (80x80)

5.04 kg/m

	Item no.
Stock length	**54.109.5100**
Cut	**54.109. ....**

Series 40 Profiles

Cleanroom Profiles – Machining

The slot in a cleanroom profile can be manually opened, either partially or completely, without any complicated procedures. A parting tool is used to open the profile at the desired location. This can be done without significant exertion. If you want to open the profile only partway, use the drilling jig to drill a bore at the end of the desired section.

Drilling

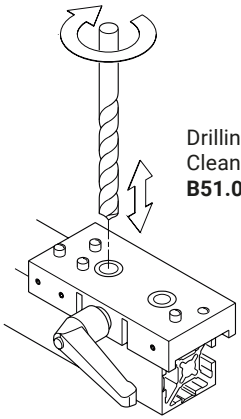

Drilling jig
Cleanroom 40
B51.03.020

For drilling jigs, on page 339

Deburring

A sanding sponge can be used to easily and manually deburr the profiles during assembly.

Sanding sponge
K902030001

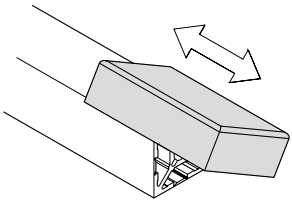

Parting

Parting tool
B46.03.102

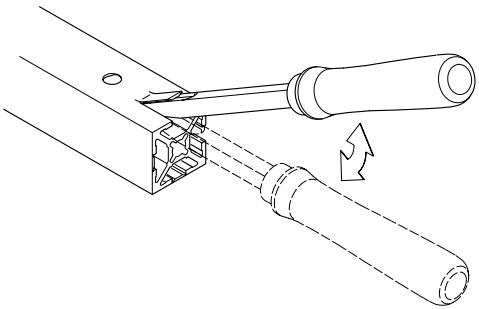

Profile with angle

Profile mk 2040.95 (40x40)
with angle E40

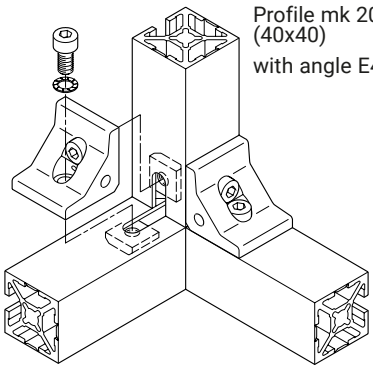

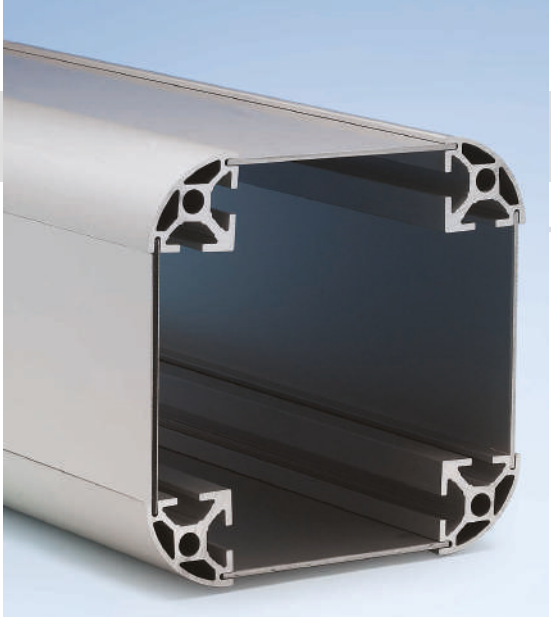

Profiles for Fastening Panelling

mk Series 40 profiles with closed slots on one or both sides have, in addition to the system slot, a second, smaller 2.75 mm slot for attaching panelling. This allows the main slot to remain free, for example for attaching angles.

Material: Anodised aluminium

End caps
starting on page 150

Example of fastening with panelling

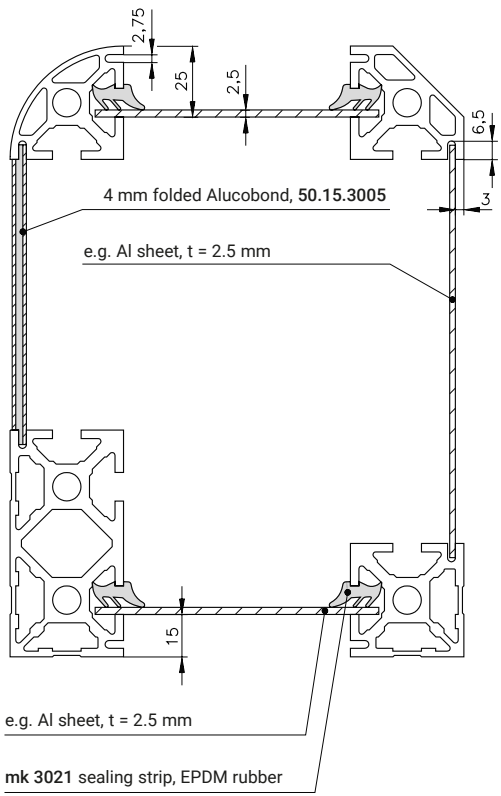

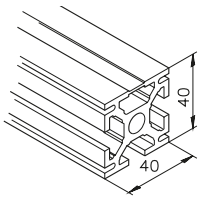

Profile mk 2040.21 (40x40)	
1.84 kg/m	
	Item no.
Stock length	**54.21.5100**
Cut	**54.21. ....**
End service	
	5421AI....
ø 10	**5421BB....**
ø 10	**5421BW....**
ø 14	**5421BY....**
ø 14	**5421BZ....**
M12	**5421AA....**
M8	**B54.21.001....**

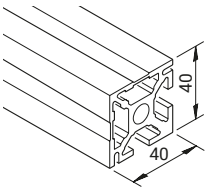

Profile mk 2040.11 (40x40)	
1.88 kg/m	
	Item no.
Stock length	**54.11.5100**
Cut	**54.11. ....**
End service	
	5411AI....
ø 10	**5411BB....**
ø 10	**5411BW....**
M12	**5411AA....**
M8	**B54.11.001....**

End caps
starting on page 150

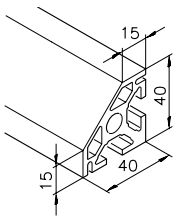

Profile mk 2040.14

1.62 kg/m

		Item no.
Stock length		**54.14.5100**
Cut		**54.14. ....**
End service		
	ø 10	**5414BB....**
	ø 10	**5414BW....**
	M12	**5414AA....**
	M8	**B54.14.001....**

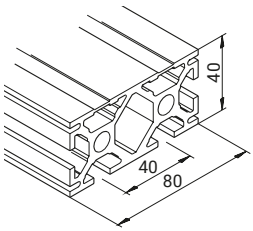

Profile mk 2040.22
(40x80)

3.43 kg/m

		Item no.
Stock length		**54.22.5100**
Cut		**54.22. ....**
End service		
	ø 10	**5422BA....**
	ø 10	**5422BB....**
	ø 14	**5422BY....**
	ø 14	**5422BZ....**

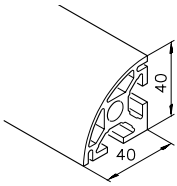

Profile mk 2040.15

1.51 kg/m

		Item no.
Stock length		**54.15.5100**
Cut		**54.15. ....**
End service		
	ø 10	**5415BB....**
	ø 10	**5415BW....**
	M12	**5415AA....**
	M8	**B54.15.001....**

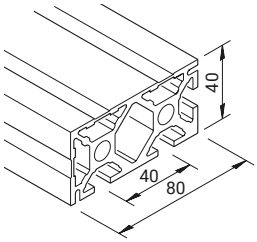

Profile mk 2040.12
(40x80)

3.43 kg/m

		Item no.
Stock length		**54.12.5100**
Cut		**54.12. ....**
End service		
	M8	**B54.12.001....**

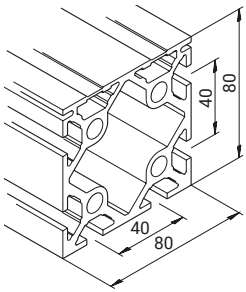

Profile mk 2040.46 (80x80)

5.44 kg/m

		Item no.
Stock length		**54.46.5100**
Cut		**54.46. ....**
End service		
	ø 14	**5446BY....**
	ø 14	**5446BZ....**
	4 x M8	**B54.46.002....**

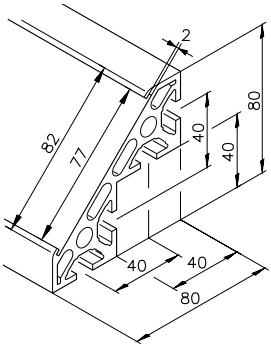

Profile mk 2040.04

3.61 kg/m

		Item no.
Stock length		**54.04.5100**
Cut		**54.04. ....**
End service		
	2 x M12	**5404AA....**
	2 x M12	**5404AB....**
	2 x M8	**B54.04.002....**
	2 x M8	**B54.04.001....**

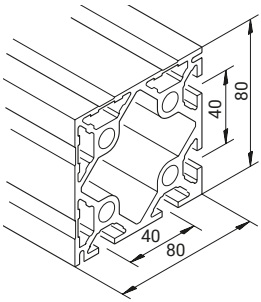

Profile mk 2040.13 (80x80)

5.32 kg/m

		Item no.
Stock length		**54.13.5100**
Cut		**54.13. ....**
End service		
	4 x M8	**B54.13.001....**

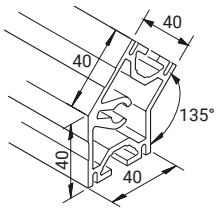

Corner blocks, on page 124

Profile mk 2040.19

2.54 kg/m

		Item no.
Stock length		**54.19.5100**
Cut		**54.19. ....**
End service		
	M8	**B54.19.002....**
	M8	**B54.19.001....**

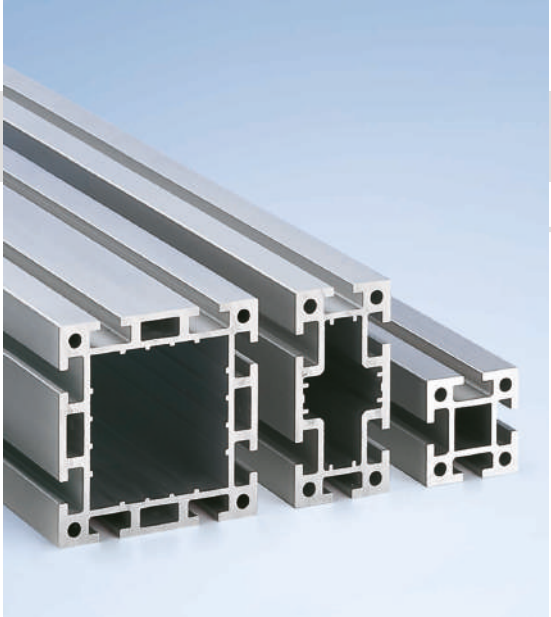

Series 50 Profiles

Basic Profiles

Series 50 profiles are based on a grid dimension of 50 x 50 mm. They are generally used for heavy-duty machine frames, frames with high static loads and load-bearing structures. The slot width of 10 mm and slot depth of 12 mm are designed for use with DIN M8 screws. However, M4, M5 and M6 screws can also be used. The profile's bore channels are designed for tapping threads or for inserting a threaded insert or HELICOIL.

Material: Anodised aluminium

End caps
starting on page 150

Example of fastening with an angle

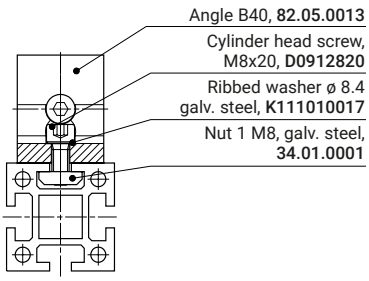

Example of fastening with flat steel

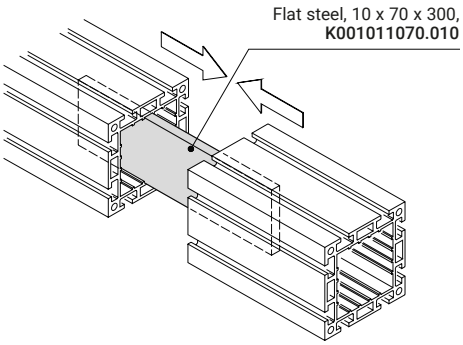

A flat steel plate can be inserted to join two profiles at their faces. Screw connections are used to fasten the profiles. The steel plate should extend into each profile a distance of at least twice its width.

Standard profile dimensions

Example of mk 2000 (50x50)

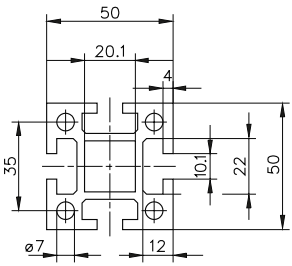

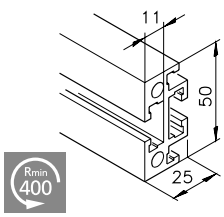

Profile mk 2001

1.59 kg/m

	Item no.
Stock length	**51.01.5100**
Cut	**51.01. ....**
End service	
M8	**5101AA....**

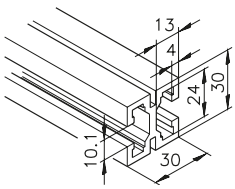

Profile mk 2030

1.06 kg/m

	Item no.
Stock length	**51.30.5100**
Cut	**51.30. ....**

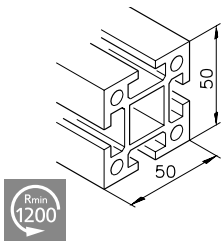

Profile mk 2000 (50x50)

2.85 kg/m

	Item no.
Stock length	**51.00.5100**
Stock length	**51.00.6100**
Cut	**51.00. ....**
End service	
α and β	**5100AF....**
ø 10	**5100BG....**
ø 14	**5100BY....**
ø 14	**5100BZ....**
4 x M8	**5100AC....**
4 x M8	**5100AD....**

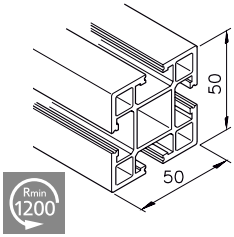

Profile mk 2014 (50x50) light duty

1.98 kg/m

	Item no.
Stock length	**51.14.5100**
Cut	**51.14. ....**
End service	
α	**5114AE....**
α and β	**5114AF....**
ø 10	**5114BG....**
ø 14	**5114BY....**
ø 14	**5114BZ....**
4 x M8	**B51.14.022....**
4 x M8	**B51.14.021....**

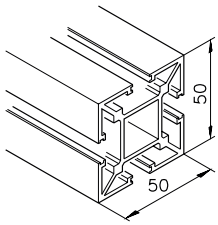

Profile mk 2002 (50x50) extra light duty

1.75 kg/m

	Item no.
Stock length	**51.02.5100**
Cut	**51.02. ....**

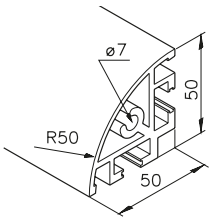

Profile mk 2003

2.00 kg/m

	Item no.
Stock length	**51.03.5100**
Cut	**51.03. ....**
End service	
M8	**5103AA....**

End caps
starting on page 150

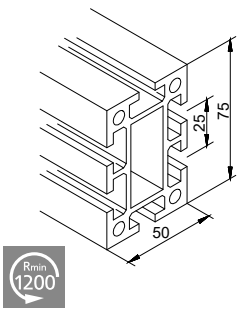

Profile mk 2023
(50x75)

3.78 kg/m

	Item no.
Stock length	**51.23.5100**
Cut	**51.23. ....**

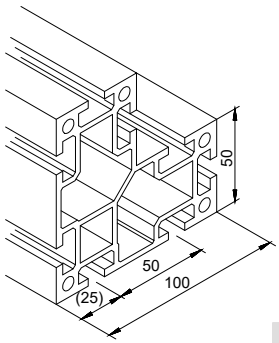

Profile mk 2009

6.27 kg/m

	Item no.
Stock length	**51.09.5100**
Cut	**51.09. ....**

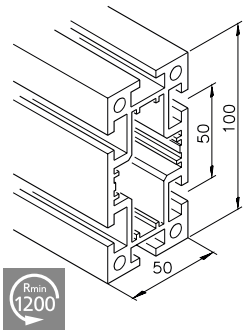

Profile mk 2004
(50x100)

4.87 kg/m

		Item no.
Stock length		**51.04.5100**
Stock length		**51.04.6100**
Cut		**51.04. ....**
End service		
		5104AI....
	ø 14	**5104BY....**
	ø 14	**5104BZ....**
	4 x M8	**5104AA....**
	4 x M8	**5104AC....**

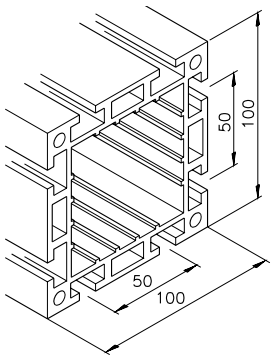

Profile mk 2005
(100x100) (light duty)

7.00 kg/m

		Item no.
Stock length		**51.05.5100**
Stock length		**51.05.6100**
Cut		**51.05. ....**
End service		
		5105AI....
	ø 14	**5105BY....**
	ø 14	**5105BZ....**
	4 x M8	**5105AB....**
	4 x M8	**5105AA....**

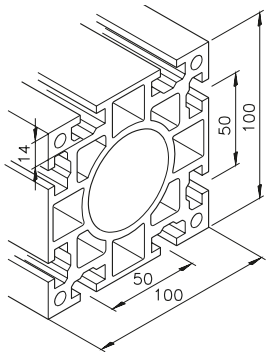

Profile mk 2011
(100x100)

9.70 kg/m

		Item no.
Stock length		**51.11.5100**
Stock length		**51.11.6100**
Cut		**51.11. ....**
End service		
	ø 14	**5111BY....**
	ø 14	**5111BZ....**
	4 x M8	**5111AA....**
	4 x M8	**5111AB....**

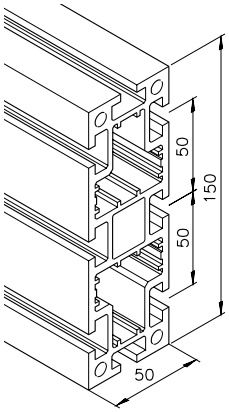

Profile mk 2006
(50x150)

7.00 kg/m

		Item no.
Stock length		**51.06.5100**
Cut		**51.06. ....**
End service		
	ø 14	**5106BY....**
	ø 14	**5106BZ....**
	4 x M8	**5106AA....**
	4 x M8	**5106AB....**

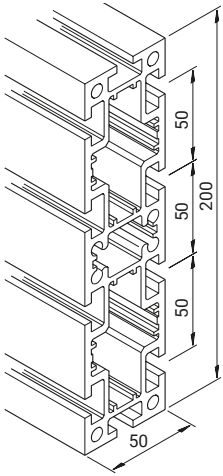

Profile mk 2008
(50x200)

9.09 kg/m

		Item no.
Stock length		**51.08.5100**
Stock length		**51.08.6100**
Cut		**51.08. ....**
End service		
	ø 14	**5108BY....**
	ø 14	**5108BZ....**
	4 x M8	**5108AA....**
	4 x M8	**5108AB....**

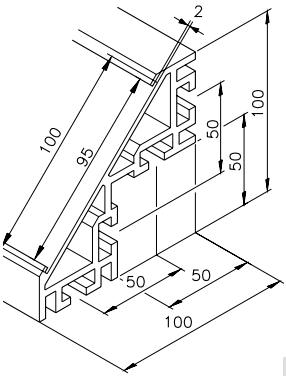

Profile mk 2072

4.62 kg/m

	Item no.
Stock length	**51.72.5100**
Cut	**51.72. ....**

Series 50 Profiles

Cleanroom Profiles

mk cleanroom profiles feature a smooth and uninterrupted surfaces that prevents dirt from accumulating. This makes the profiles ideally suited for environments that place stringent requirements on cleanliness or design. The typical mk edge radius of only 1 mm ensures smooth connections between profiles without any gaps. The profiles' slots can be opened without complicated machining so that all connecting elements in the standard mk product range can be used.

Material: Anodised aluminium

Drilling

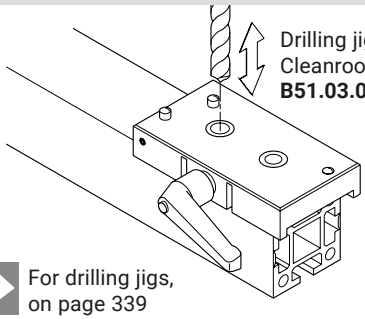

For drilling jigs, on page 339

Parting

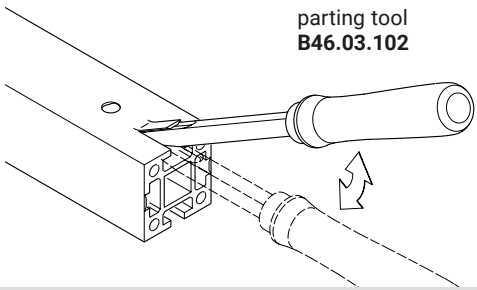

Deburring

A sanding sponge can be used to easily and manually deburr the profiles during assembly.

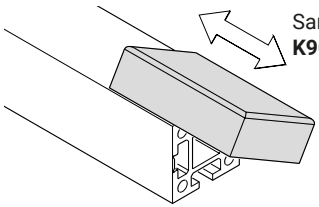

End caps
starting on page 150

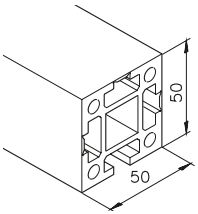

Profile mk 2017 (50x50)	
3.03 kg/m	
	Item no.
Stock length	**51.17.5100**
Cut	**51.17. ....**

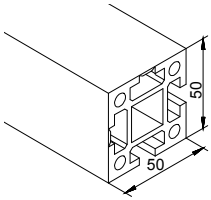

Profile mk 2018 (50x50)	
3.00 kg/m	
	Item no.
Stock length	**51.18.5100**
Cut	**51.18. ....**

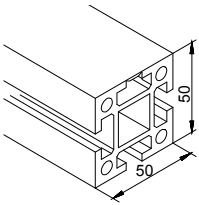

Profile mk 2019 (50x50)	
3.00 kg/m	
	Item no.
Stock length	**51.19.5100**
Cut	**51.19. ....**

Profiles for Telescoping

These profiles can be combined with the mk 2000 (50x50) basic profile to allow for quick and easy height adjustment with a screw or clamping lever, for example in a support frame.

Material: Anodised aluminium

for series 40 telescoping profiles, on page 316

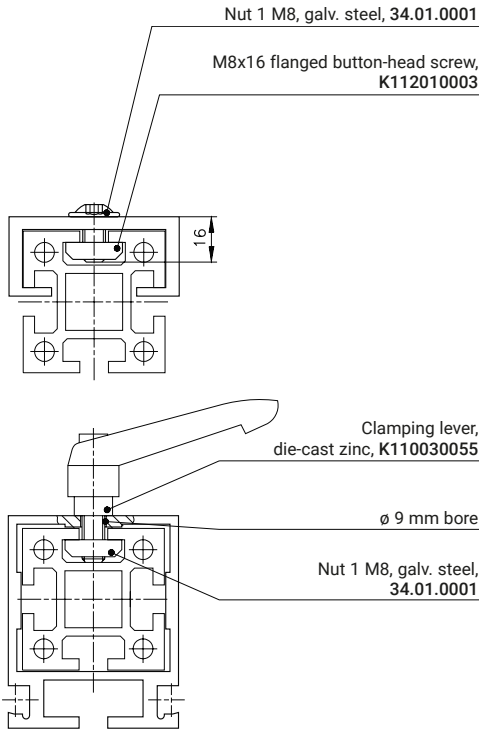

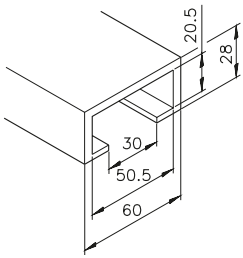

Profile mk 2033

1.50 kg/m

	Item no.
Stock length	**51.33.5100**
Cut	**51.33. ....**

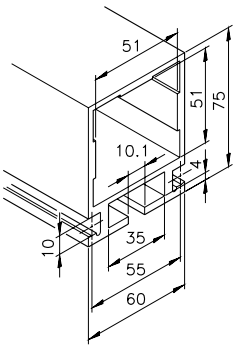

Profile mk 2031

2.85 kg/m

	Item no.
Stock length	**51.31.5100**
Cut	**51.31. ....**

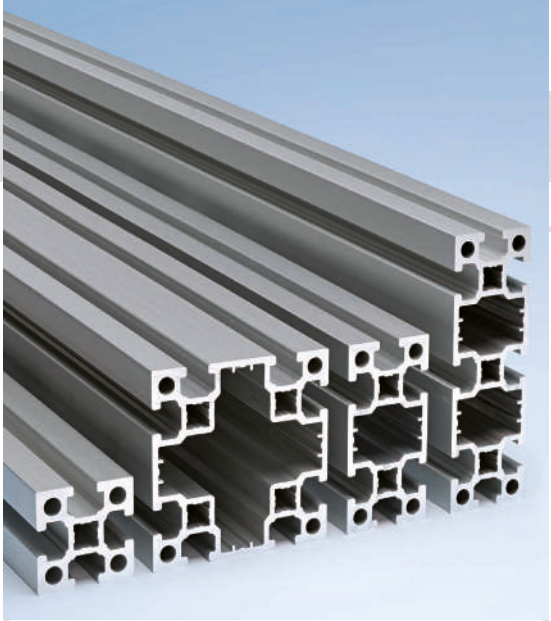

Series 60 Profiles

Basic Profiles

Series 60 profiles are based on a grid dimension of 60 x 60 mm. They are generally used for large gantries and machine frames subject to the heaviest loads, applications which are usually reserved for steel constructions. The slot width of 14 mm and slot depth of 19 mm are designed for use with DIN M12 screws. However, M6, M8 and M10 screws can also be used. The profile's bore channels are designed for tapping threads or for inserting a threaded insert or HELICOIL.

Material: Anodised aluminium

Example of fastening with an angle

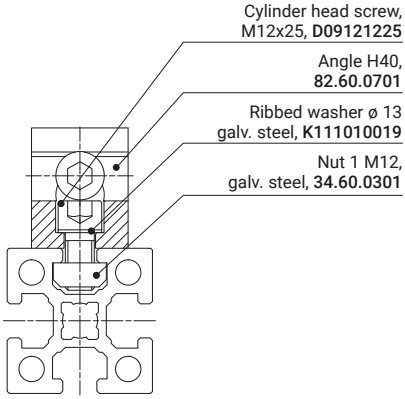

Example of fastening with flat steel

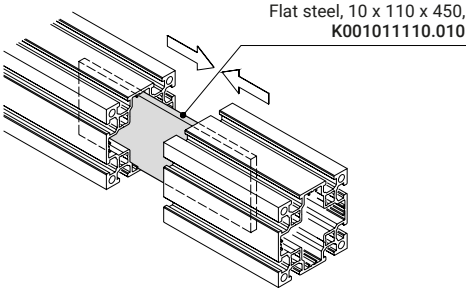

A flat steel plate can be inserted to join two profiles at their faces. Screw connections are used to fasten the profiles. The steel plate should extend into each profile a distance of at least twice its width.

Standard profile dimensions

Example of mk 2060.01 (60x60)

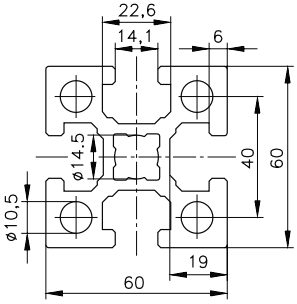

End caps
starting on page 150

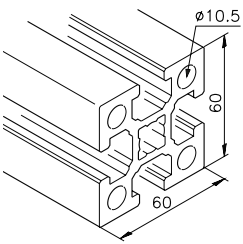

Profile mk 2060.01
(60x60)

4.31 kg/m

		Item no.
Stock length		**60.01.5100**
Cut		**60.01. ....**
End service		
	α and β	**6001AF....**
	4 x M12	**6001AA....**
	4 x M12	**6001AB....**
	M12	**B60.01.606....**

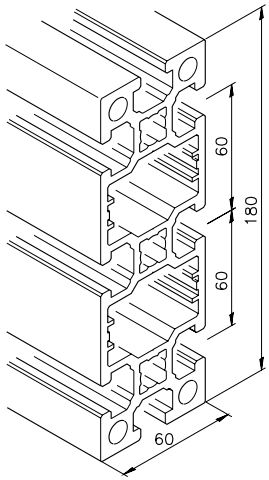

Profile mk 2060.03
(60x180)

9.57 kg/m

		Item no.
Stock length		**60.03.5100**
Cut		**60.03. ....**
End service		
	4 x M12	**6003AB....**

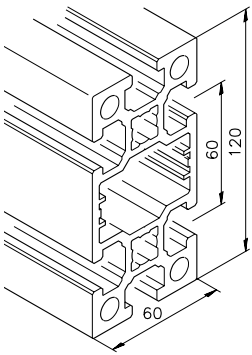

Profile mk 2060.02
(60x120)

6.95 kg/m

		Item no.
Stock length		**60.02.5100**
Cut		**60.02. ....**
End service		
	4 x M12	**6002AA....**
	4 x M12	**6002AB....**
	4 x M8	**B60.02.601....**

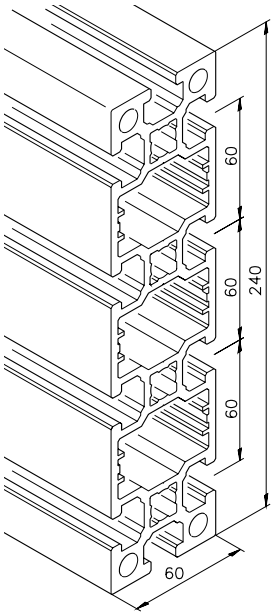

Profile mk 2060.04
(60x240)

12.20 kg/m

	Item no.
Stock length	**60.04.5100**
Cut	**60.04. ....**

2

End caps
starting on page 150

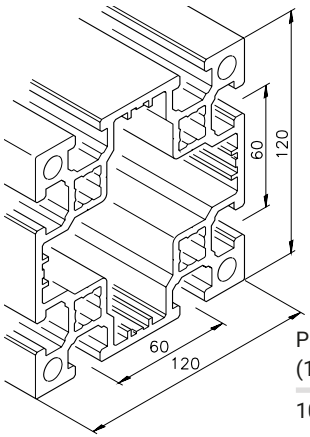

Profile mk 2060.05
(120x120)

10.30 kg/m

		Item no.
Stock length		**60.05.5100**
Cut		**60.05. ....**
End service		
	4 x M12	**6005AA....**
	4 x M12	**6005AB....**
	4 x M12	**B60.05.605....**

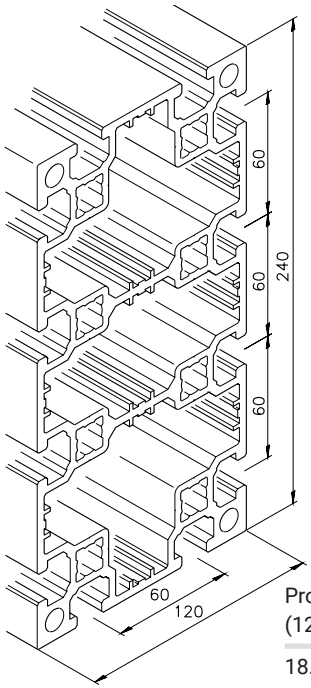

Profile mk 2060.07
(120x240)

18.10 kg/m

	Item no.
Stock length	**60.07.5100**
Cut	**60.07. ....**

Notes

Section 3 Connecting Elements

3

Choosing a Connection

Features of mk Connection Technology 74
Load specifications 75
Selection Matrix for Connecting Elements 77

Angle Fasteners

90° Angles 78
Angle Braces 89
90° Angle Brackets 90
30/45/60° Angles 94
Adjustable Angle Brackets 95

Plate Fasteners

Plate Fasteners 96
Heavy-Duty Plate Fasteners 100

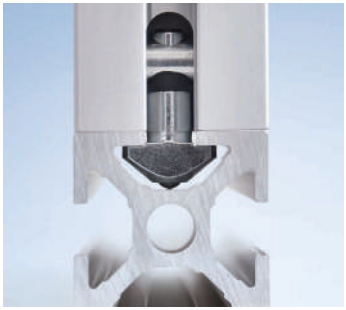

Internal Fasteners

Tension Plugs and Screw Connections 106
Anchor Fasteners 113
Clamping Jaws 114
Bolt Fasteners 115
Hinge Tension Plugs 116
Tension Plugs, Front Side 117
Parallel Connectors 118

Corner Block Joints

Corner Blocks 120
Truss Blocks 127

Profile Clamps 130

Series D28 Connectors

D28 90° Angle Fasteners 132
D28 Cross Connector 133
D28 Angle Fasteners 134
D28 Ball Joint Connectors 135
D28 Parallel Connectors 136
D28 Adapter for Series 40 Profiles 137

Nuts/T-nuts

Nuts 138
Countersunk Nuts 140
T-slot Nuts 141
Nuts for Later Mounting 142
Nut Fixtures 144

Standard Parts

Cylinder Head Screws 145
Countersunk Head Screws 145
Flanged Button-Head Screws 146
Hexagon Head Screws 146
Threaded Insert 146
Helicoil 146
Threaded Pins 147
Hexagon Nuts 147
Ribbed Washers 147
Tension Washers 147
Wing repair washers 147

Features of mk Connection Technology

The mk profile system offers a wide range of connection options and gives you ultimate flexibility in designing your structure. You can select from a variety of different connectors, each with their own special features and advantages, for example angle fasteners, internal fasteners, plate fasteners, corner blocks, truss blocks and clamped connections. With the mk profile system, you can create connections at any angle. All connecting elements use standard screws. Whatever your requirements, we always have the perfect connection technology.

The recommended standard connector is the solid angle fastener. It is a simple and extremely sturdy screw connection that can be used without profile machining. For each angle we also offer a complete assembly kit that contains the necessary fastening accessories (screws, ribbed washers, nuts/T-nuts) in the appropriate quantities.

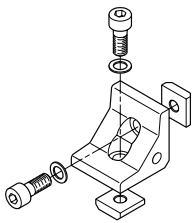

Angles can also be mounted or removed later and allow profiles from various series or other components to be connected to each other. Angles with a key prevent undesired twisting and provide a perfectly aligned connection.

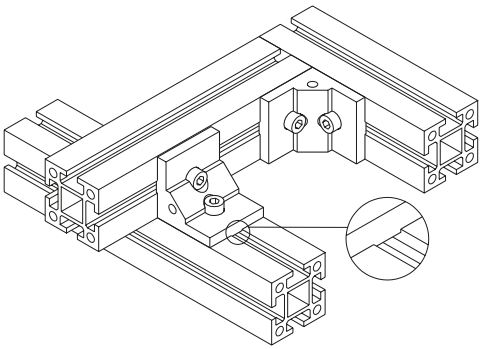

Threads for inserting panelling elements can be tapped into the angle's lateral bores.

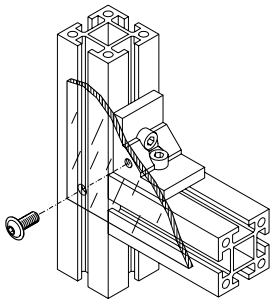

To create a conductive connection using angles, simply use the nuts/T-nuts labelled with the ESD symbol. It may be possible to adapt nuts not labelled for ESD use; please contact us.

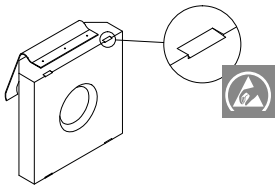

In addition to angle fasteners, we also offer a range of other connectors for different applications.

See page 77

Load specifications

... for screw connections

Consult the literature to calculate the necessary screw dimensions. The values listed here for max. operating force and frictional connection include a safety factor of $s_0 = 2$ compared with the max. values given in the literature. The specifications applies at room temperature to screws of strength class 8.8.

Thread	Min. screw depth [mm] 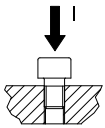	Pretension [N] 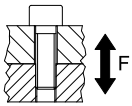	Tightening torque [Nm] 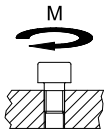	Max. static operating force in axial direction [N] 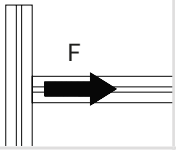	Max. frictional connection [N] 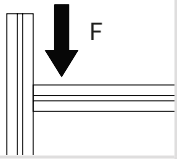
M 5	≥ 4	6,000	6	1,800	400
M 6*	≥ 4	6,000	7	1,800	400
M 6	≥ 6	9,000	10	2,500	630
M 8	≥ 6	16,500	25	4,000	1,100
M 10	≥ 8	26,000	49	7,400	1,800
M 12*	≥ 9	26,000	63	8,600	1,800
M 12	≥ 10	38,300	86	11,300	1,900

* For connections with an M6 nut (Series 25 with 6 mm slot) or M12 nut (Series 60 with 14 mm slot), the pretension and thus the max. frictional connection and max. operating force must be reduced. This is due to the screw depth of the nut and the max. permissible surface pressure on the profile.

Safety factors

The following safety factors are recommended depending on the application:

Static or pulsating load:	$s_0 \geq 2$
Alternating load direction:	$s_0 \geq 3$
Dynamic loads:	$s_0 \geq 4$
Vibration and shocks:	$s_0 \geq 5$

Load specifications

Profiles combined with nuts

The profiles are designed for different strength and deformation requirements. Will your profile structure withstand the loads it is meant to support? Use our quick and convenient online deflection calculator to calculate the deflection of mk profiles as a function of load (see page 13).

Light duty and extra light duty profiles have a reduced pull-out strength, so longer nuts should be used. Nuts that have a smaller contact surface compared to standard nuts also have a lower pull-out strength.

The following table serves as a rough guide as to how the pull-out strength changes with different profile–nut combinations, using the example of an M8 nut in Series 40 and 50 profiles.

	 Nut 1 34.01.0001	 Swivel-in nut 34.16.0831	 Slot nut 34.03.0002	 T-nut 34.06.0002
mk 2040.01 (40x40)	**100 % (4 kN)**	**66 %**	**50 %**	**33 %**
mk 2040.40 (40x40) light duty	**66 %**	**50 %**	**25 %**	**25 %**
mk 2040.31 (40x40) extra light duty	**50 %**	**25 %**	**12,5 %**	**12,5 %**
mk 2000 (50x50)	**100 % (4 kN)**	**75 %**	**75 %**	**66 %**
mk 2014 (50x50) light duty	**75 %**	**66 %**	**50 %**	**33 %**
mk 2002 (50x50) extra light duty	**25 %**	**25 %**	**12,5 %**	**12,5 %**

Screw connection on the profile face

For threads cut/formed directly into the profile, we recommend a screw depth of 2x the thread size. If the bore cannot be fully tapped (e.g. the centre bore in Series 60), you must reduce the load capacity. Feel free to ask us for load capacity details.

Angles

Angles can be used to transfer loads from the screw connection. Angles with keys are recommended because they have machined contact surfaces, engage positively and are easier to mount.

Ribbed washer

The teeth on a ribbed washer cause plastic deformation of the screw head contact surface, pressing into the material. This provides a strong screw connection that can withstand dynamic loads. If you disassemble and reassemble the connection multiple times, you should replace at least the ribbed washer to ensure that the locking function is maintained. For applications with vibrations and highly dynamic loads, you should additionally secure the screws with thread-locking adhesive (e.g. Loctite).

Selection Matrix for Connecting Elements

++ Recommended **+ Suitable** **o Not suitable**

	High load capacity 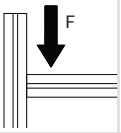	High torque capacity 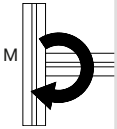	High twisting moment 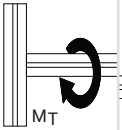	Little machining required 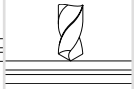	Little assembly work required 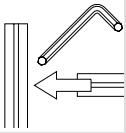	Later mounting in frames 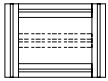	Internal slots remain free 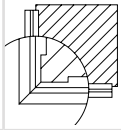
Angles (one side)	+	+	+	++	++	++	o
Angles (two sides)	++	++	++	++	++	++	o
Plates	+	+	+	++	++	++	++
Tension plugs	+	o	o	+	++	o	++
Tension plug S	+	+	+	+	++	o	+
Cleanroom fasteners	+	o	o	+	++	o	++
Clamping jaws	+	o	o	+	+	++	o
Anchor fasteners	+	o	o	++	+	o	o
Bolt fasteners	++	+	+	+	+	++	o
Corner blocks	+	o	o	+	+	o	o
Clamps	+	o	o	++	+	o	o

Angle braces or truss blocks can be used to further reinforce right-angled connections.

Angle Fasteners

90° Angles

The angle fastener is a simple and extremely sturdy screw connection that can be used without profile machining. Angle fasteners are also suitable for retrofitting components on existing structures. Angles with a key prevent undesired twisting and provide a perfectly aligned connection.

Material: Tumbled aluminium

25 | 40 | 50 | 60 M5x10 DIN 6912

Fastening example set T25.50.1020

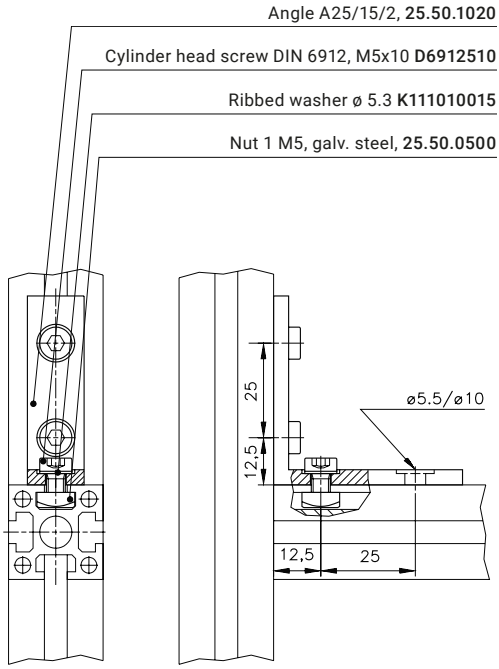

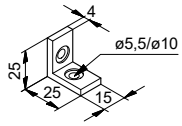

Angle 15
25.50.1000
T25.50.1000*

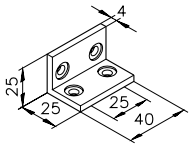

Angle 40
25.50.1001
T25.50.1001*

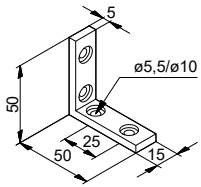

Angle A25/15/2
25.50.1020
T25.50.1020*

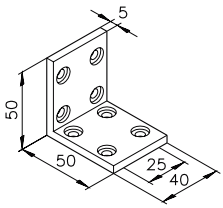

Angle A25/40/2
25.50.1021
T25.50.1021*

* Set with fastening accessories, contains appropriate quantities of screws, ribbed washers and nuts.

90° Angles

Angles with a key prevent undesired twisting and provide a perfectly aligned connection.

Material: Tumbled aluminium

25 | 40 | 50 | 60 M5x12

Fastening example set T25.50.1010

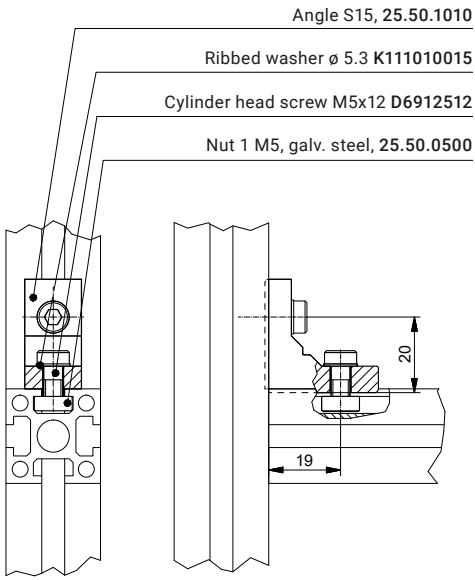

Angle (with key)

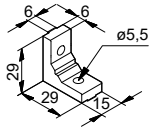

Angle S15
25.50.1010

T25.50.1010*

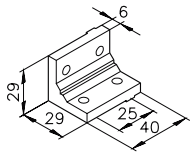

Angle S40
25.50.1012

T25.50.1012*

* Set with fastening accessories, contains appropriate quantities of screws, ribbed washers and nuts.

Angle Fasteners

90° Angles

Material: Tumbled aluminium

Assembly video angles
https://youtu.be/JQxyc-LRbr0

M8x16

Fastening example Set T82.40.0801

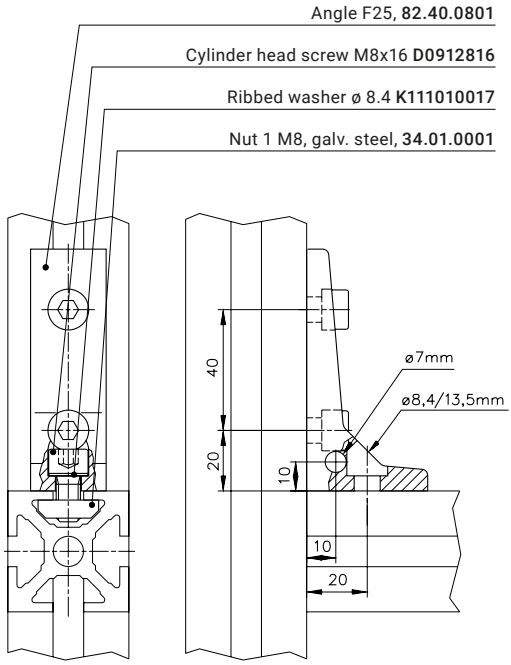

Threads for inserting panelling elements can be tapped into the angle's lateral bores.

Angle P

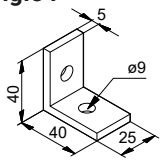

25 | **40** | 50 | 60

Angle P1
82.00.0023

T82.00.0023*

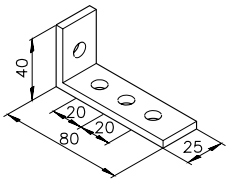

25 | **40** | 50 | 60

Angle P3
82.00.0024

T82.00.0024*

Angle E

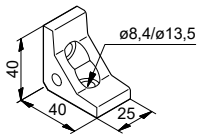

25 | **40** | 50 | 60

Angle E25
82.40.0701

T82.40.0701*

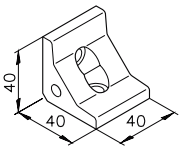

25 | **40** | 50 | 60

Angle E40
82.40.0702

T82.40.0702*

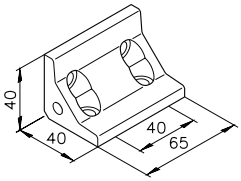

25 | **40** | 50 | 60

Angle E65
82.40.0704

T82.40.0704*

* Set with fastening accessories, contains appropriate quantities of screws, ribbed washers and nuts.

M8x16

Angle E

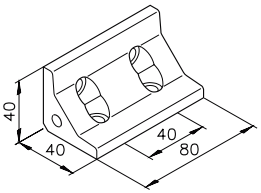

25 **40** 50 60

Angle E80

82.40.0703

T82.40.0703*

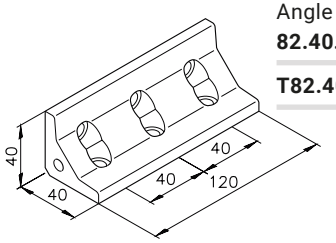

25 **40** 50 60

Angle E120

82.40.0705

T82.40.0705*

Angle Es (with key)

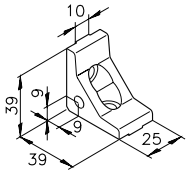

25 **40** **50** 60

Angle E25s

82.40.0741

T82.40.0741*

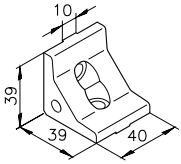

25 **40** **50** 60

Angle E40s

82.40.0742

T82.40.0742*

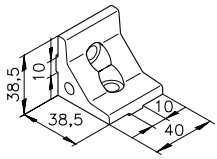

25 **40** 50 60

Angle E40s3

82.40.0747

T82.40.0747*

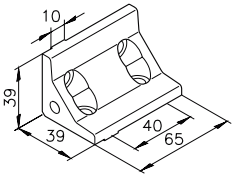

25 **40** 50 60

Angle E65s

82.40.0744

T82.40.0744*

Angle F

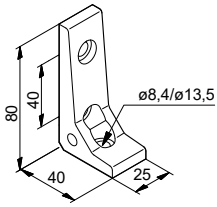

25 **40** 50 60

Angle F25

82.40.0801

T82.40.0801*

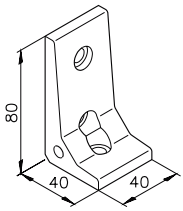

25 **40** 50 60

Angle F40

82.40.0802

T82.40.0802*

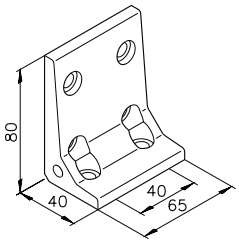

25 **40** 50 60

Angle F65

82.40.0804

T82.40.0804*

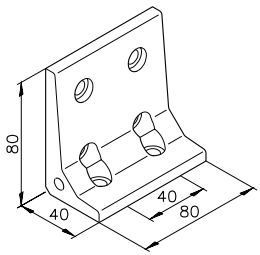

25 **40** 50 60

Angle F80

82.40.0803

T82.40.0803*

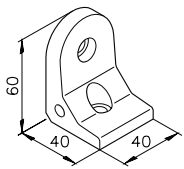

25 **40** 50 60

Angle F40/R

82.40.0805

T82.40.0805*

for attaching partitions
to posts

* Set with fastening accessories, contains
appropriate quantities of screws, ribbed washers and nuts.

90° Angles

Material: Tumbled aluminium

M8x16

Angle Fs (with key)

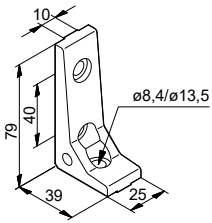

25 **40** 50 60

Angle F25s

82.40.0841

T82.40.0841*

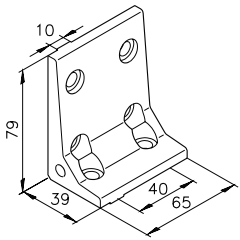

25 **40** 50 60

Angle F65s

82.40.0844

T82.40.0844*

Angle G

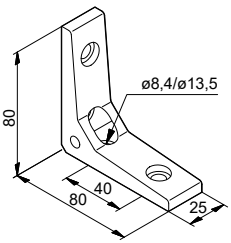

25 **40** 50 60

Angle G25

82.40.0901

T82.40.0901*

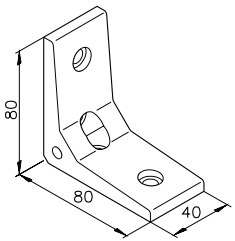

25 **40** 50 60

Angle G40

82.40.0902

T82.40.0902*

Angle G

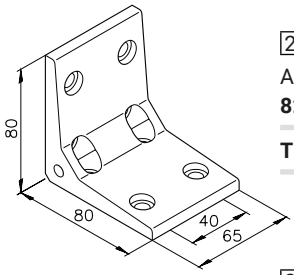

25 **40** 50 60

Angle G65

82.40.0904

T82.40.0904*

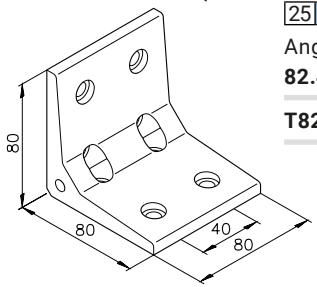

25 **40** 50 60

Angle G80

82.40.0903

T82.40.0903*

Angle Gs (with key)

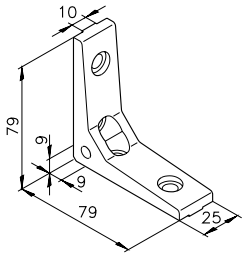

25 **40** 50 60

Angle G25s

82.40.0941

T82.40.0941*

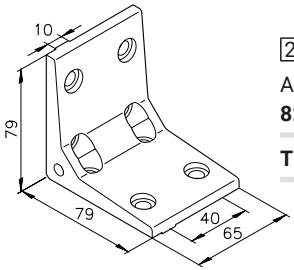

25 **40** 50 60

Angle G65s

82.40.0942

T82.40.0942*

* Set with fastening accessories, contains appropriate quantities of screws, ribbed washers and nuts.

90° Angles

Material: Tumbled aluminium

Angle A

M8x16

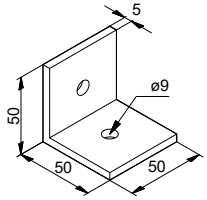

25 | 40 | 50 | 60

Angle A1
82.02.0001

T82.02.0001*

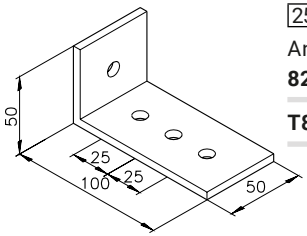

25 | 40 | 50 | 60

Angle A3
82.03.0001

T82.03.0001*

Fastening example Set T82.05.0003

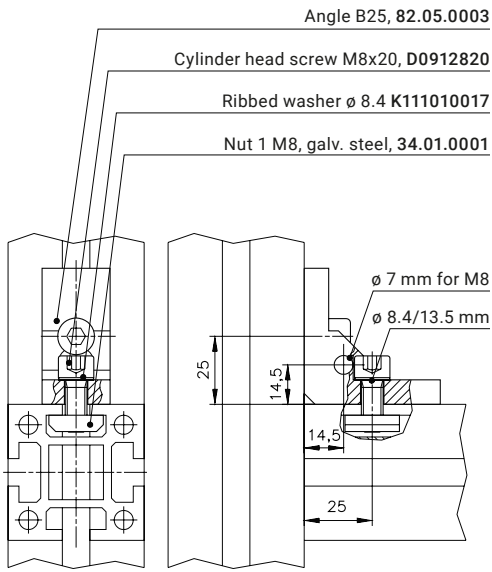

Threads for inserting panelling elements can be tapped into the angle's lateral bores.

Angle B

M8x20

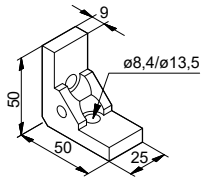

25 | 40 | 50 | 60

Angle B25
82.05.0003

T82.05.0003*

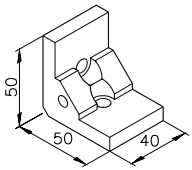

25 | 40 | 50 | 60

Angle B40
82.05.0013

T82.05.0013*

* Set with fastening accessories, contains appropriate quantities of screws, ribbed washers and nuts.

3

90° Angles

Material: Tumbled aluminium

M8x20

Angle B

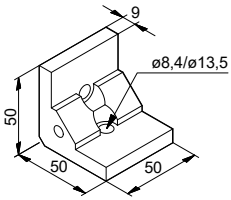

25 40 **50** 60

Angle B50

82.05.0004

T82.05.0004*

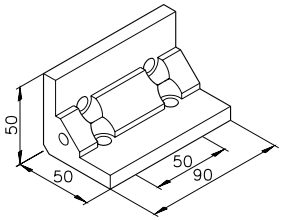

25 40 **50** 60

Angle B90

82.05.0022

T82.05.0022*

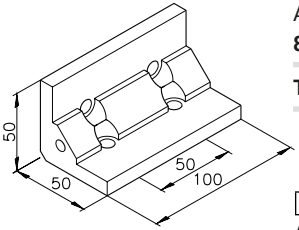

25 40 **50** 60

Angle B100

82.05.0006

T82.05.0006*

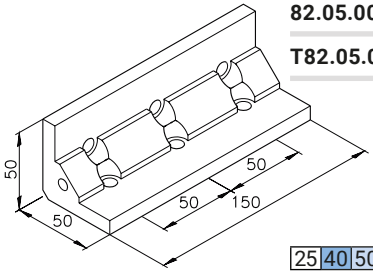

25 **40** 50 60

Angle B150

82.05.0012

T82.05.0012*

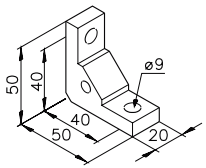

Angle B20/40

82.05.0026

T82.05.0026*

for attaching partitions to posts

Angle Bs (with key)

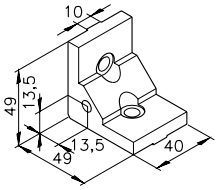

25 **40** 50 60

Angle B40s2

82.05.0055

T82.05.0055*

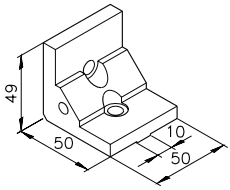

25 40 **50** 60

Angle B50s1

82.05.0051

T82.05.0051*

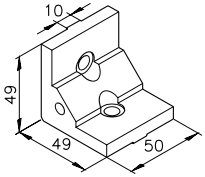

25 40 **50** 60

Angle B50s2

82.05.0052

T82.05.0052*

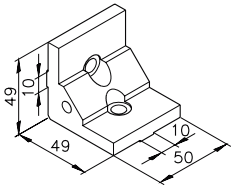

25 40 **50** 60

Angle B50s3

82.05.0053

T82.05.0053*

* Set with fastening accessories, contains appropriate quantities of screws, ribbed washers and nuts.

M8x20

Angle C

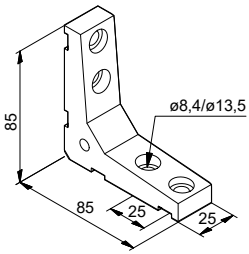

25 40 **50** 60

Angle C25

82.06.0001

T82.06.0001*

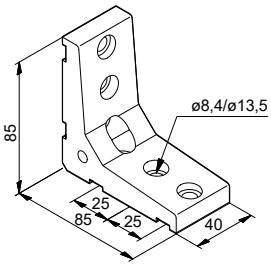

25 40 **50** 60

Angle C40/3

82.06.0014

T82.06.0014

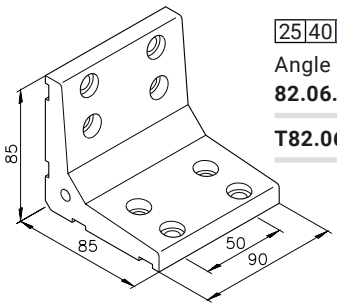

25 40 **50** 60

Angle C90

82.06.0003

T82.06.0003*

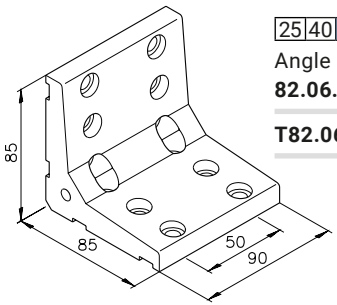

25 40 **50** 60

Angle C90/2

82.06.0009

T82.06.0009*

Angle C

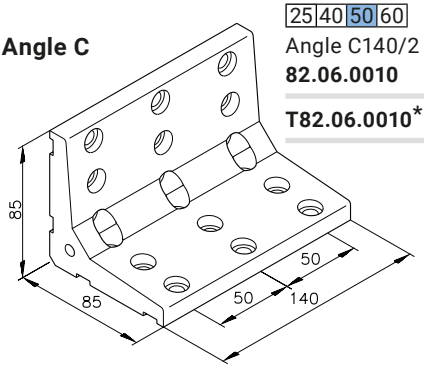

25 40 **50** 60

Angle C140/2

82.06.0010

T82.06.0010*

Angle Cs (with key)

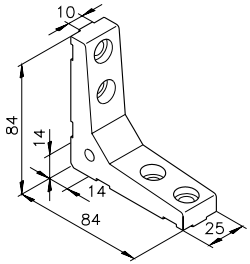

25 **40** 50 60

Angle C25s

82.06.0040

T82.06.0040*

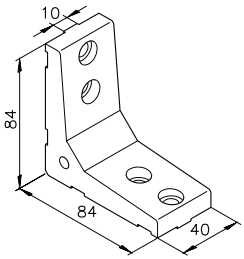

25 **40** 50 60

Angle C40s

82.06.0041

T82.06.0041*

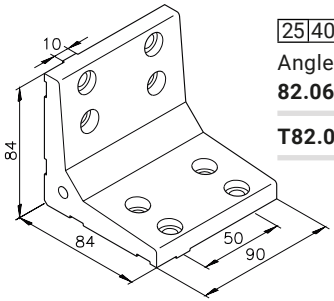

25 40 **50** 60

Angle C90s

82.06.0042

T82.06.0042*

* Set with fastening accessories, contains appropriate quantities of screws, ribbed washers and nuts.

90° Angles

Material: Tumbled aluminium

M8x20

3

Angle D

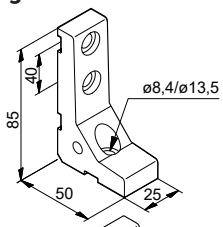

25 40 **50** 60

Angle D25

82.07.0001

T82.07.0001*

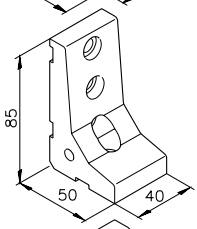

25 40 **50** 60

Angle D40/3

82.07.0013

T82.07.0013*

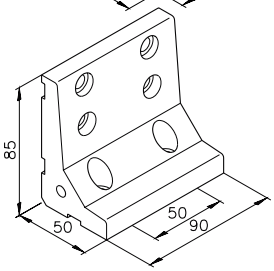

25 40 **50** 60

Angle D90

82.07.0003

T82.07.0003*

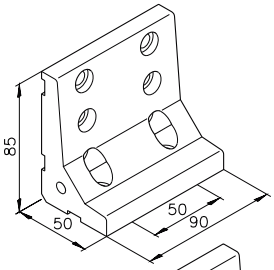

25 40 **50** 60

Angle D90/2

82.07.0009

T82.07.0009*

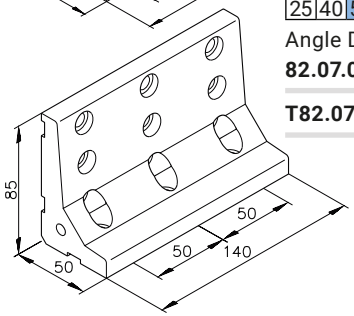

25 40 **50** 60

Angle D140/2

82.07.0010

T82.07.0010*

Angle Ds (with key)

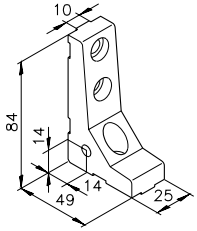

25 **40** 50 60

Angle D25s

82.07.0040

T82.07.0040*

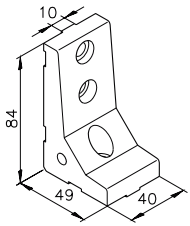

25 **40** 50 60

Angle D40s

82.07.0041

T82.07.0041*

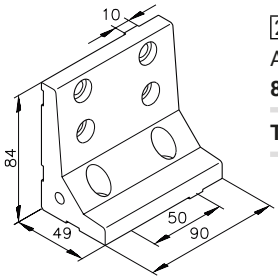

25 40 **50** 60

Angle D90s

82.07.0042

T82.07.0042*

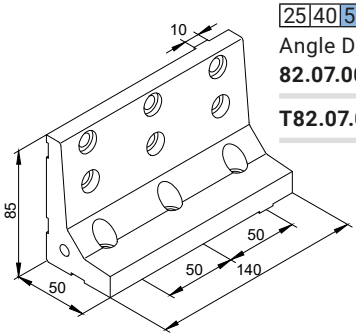

25 40 **50** 60

Angle D140s

82.07.0043

T82.07.0043*

* Set with fastening accessories, contains appropriate quantities of screws, ribbed washers and nuts.

90° Angles

Material: Tumbled aluminium

25 | 40 | 50 | 60 M12x25

Angle H

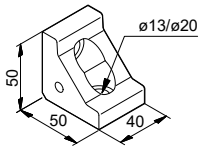

Angle H40
82.60.0701

T82.60.0701*

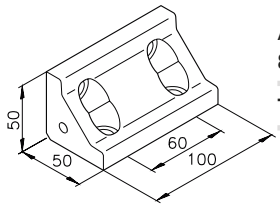

Angle H100
82.60.0702

T82.60.0702*

Angle Hs (with key)

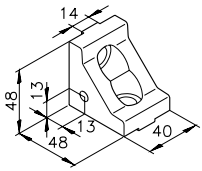

Angle H40s
82.60.0741

T82.60.0741*

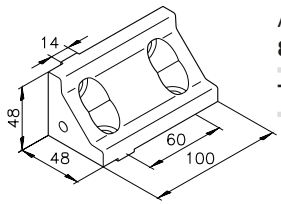

Angle H100s
82.60.0742

T82.60.0742*

Fastening example Set T82.60.0801

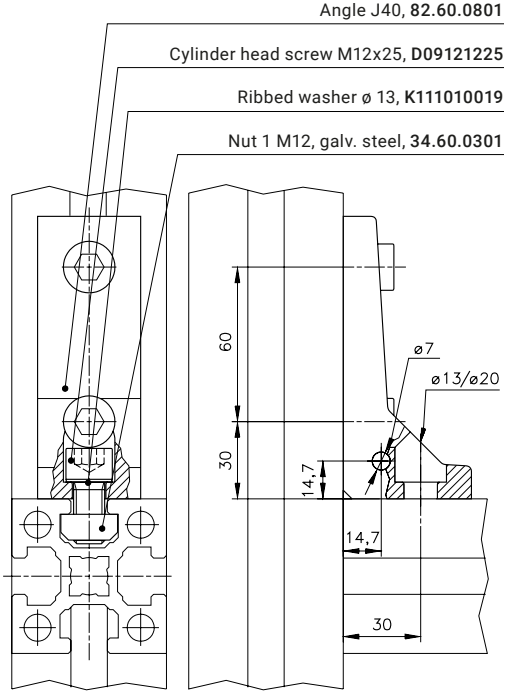

Threads for inserting panelling elements can be tapped into the angle's lateral bores.

* Set with fastening accessories, contains appropriate quantities of screws, ribbed washers and nuts.

90° Angles

Material: Tumbled aluminium

25 | 40 | 50 | 60 M12x25

Angle J

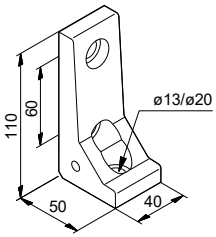

Angle J40
82.60.0801

T82.60.0801*

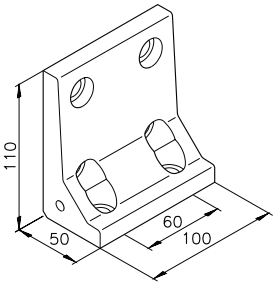

Angle J100
82.60.0802

T82.60.0802*

Angle K

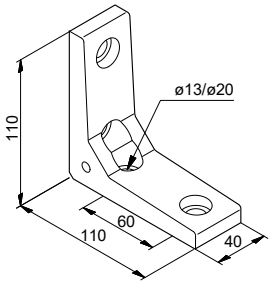

Angle K40
82.60.0901

T82.60.0901*

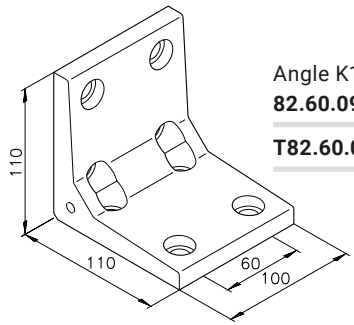

Angle K100
82.60.0902

T82.60.0902*

Angle Ks (with key)

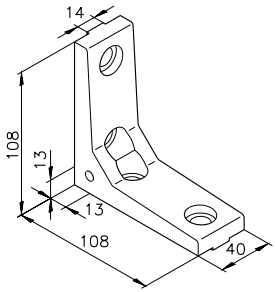

Angle K40s
82.60.0941

T82.60.0941*

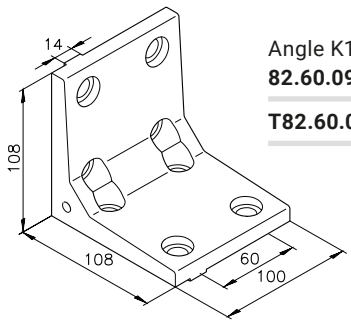

Angle K100s
82.60.0942

T82.60.0942*

* Set with fastening accessories, contains appropriate quantities of screws, ribbed washers and nuts.

Angle Braces

Angle braces are a simple option for lending higher stability to a profile structure under heavy loads. The angle braces are installed using cylinder head screws and nuts, making them suitable for later installation into existing systems. End services includes the 45° mitre cuts on both ends and the bores for inserting the cylinder head screws.

Material: anodised aluminium

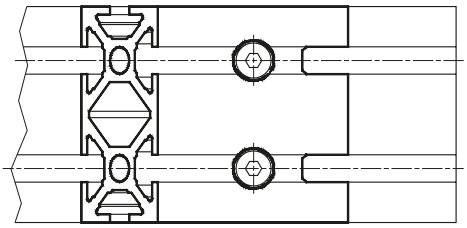

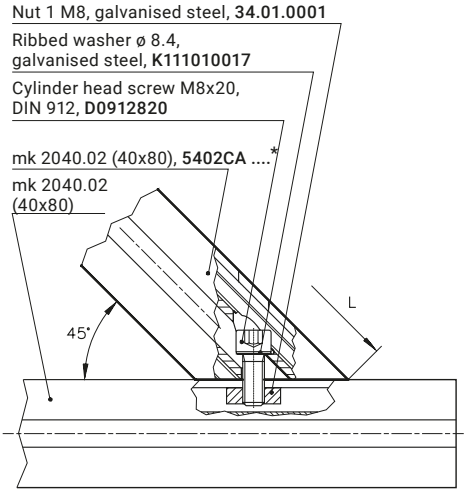

M8x20

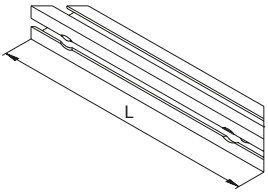

Angle brace 01
Profile mk 2040.01
(40x40)

	Artikel-Nr.
Length 200 mm	**5401CC0200**
Length 300 mm	**5401CC0300**
Length 400 mm	**5401CC0400**
Length 500 mm	**5401CC0500**

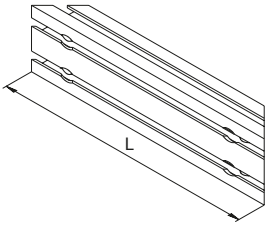

Angle brace 02
Profile mk 2040.02
(40x80)

	Artikel-Nr.
Length 200 mm	**5402CA0200**
Length 300 mm	**5402CA0300**
Length 400 mm	**5402CA0400**
Length 500 mm	**5402CA0500**

Angle Fasteners

90° Angle Brackets

mk angle brackets are an excellent addition to mk's range of angles, designed for structures subject to high static loads and for connecting heavy, third-party components. Angle brackets can be used without profile machining and are also suitable for retrofitting components on existing structures.

Material: Die-cast aluminium, milled at right angles

25 | **40** | 50 | 60 M8x25

Fastening example

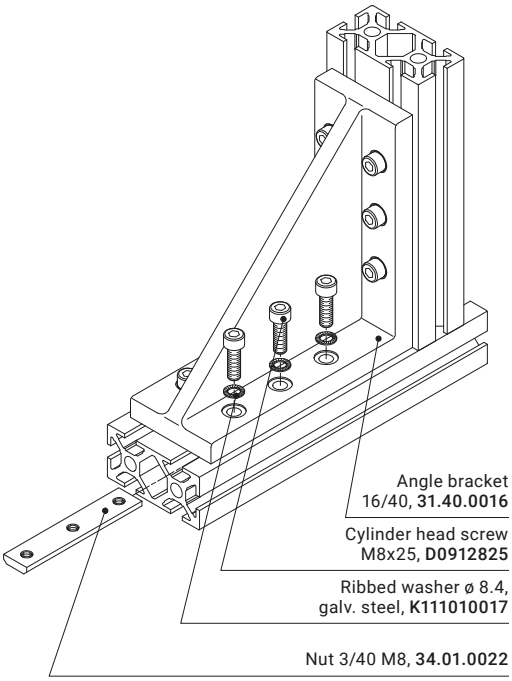

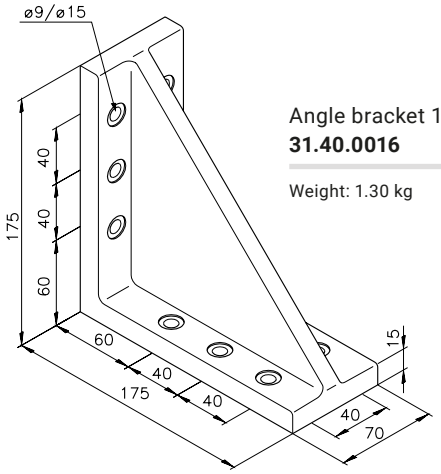

Angle bracket 16/40
31.40.0016

Weight: 1.30 kg

25 | 40 | 50 | 60

M8x20

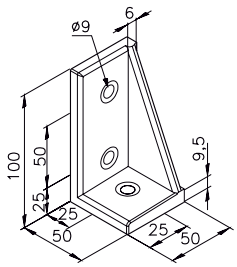

Angle bracket 1
31.00.0001

Weight: 0.25 kg

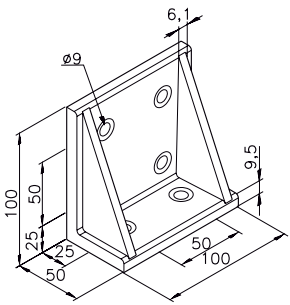

Angle bracket 2
31.00.0002

Weight: 0.50 kg

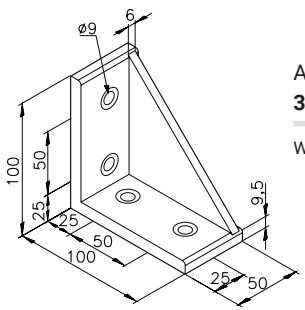

Angle bracket 4
31.00.0004

Weight: 0.35 kg

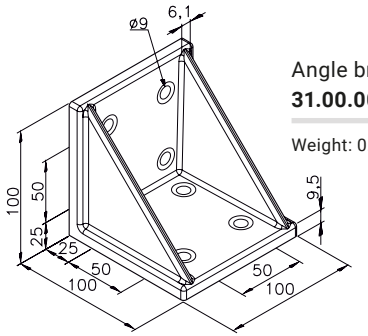

Angle bracket 5
31.00.0005

Weight: 0.70 kg

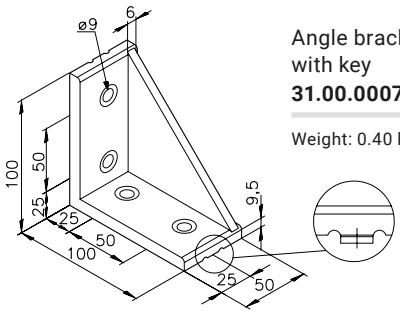

Angle bracket 7
with key
31.00.0007

Weight: 0.40 kg

90° Angle Brackets

Material: Die-cast aluminium, milled at right angles

25 40 **50** 60

M8x25

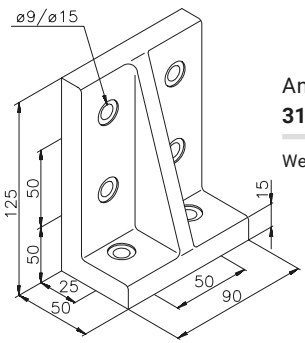

Angle bracket 14
31.00.0014

Weight: 0.70 kg

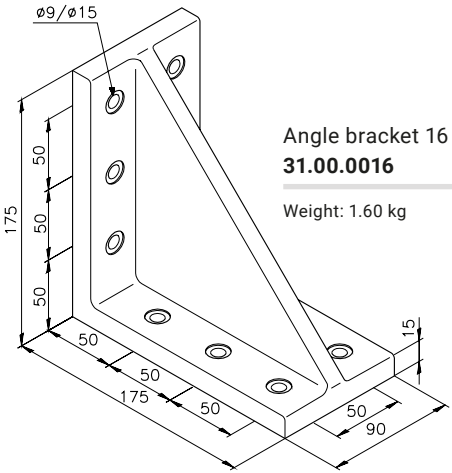

Angle bracket 16
31.00.0016

Weight: 1.60 kg

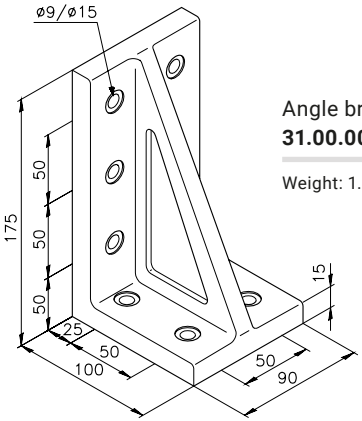

Angle bracket 15
31.00.0015

Weight: 1.20 kg

90° Angle Brackets

Material: Die-cast aluminium, milled at right angles

25 | 40 | 50 | **60** M12x30

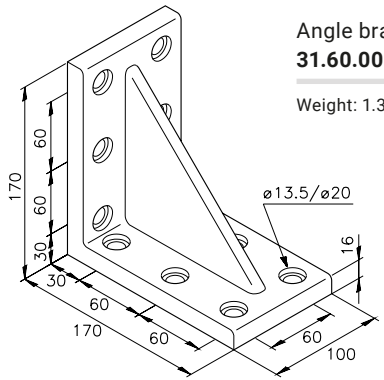

Angle bracket 60/1
31.60.0009

Weight: 1.38 kg

Fastening example

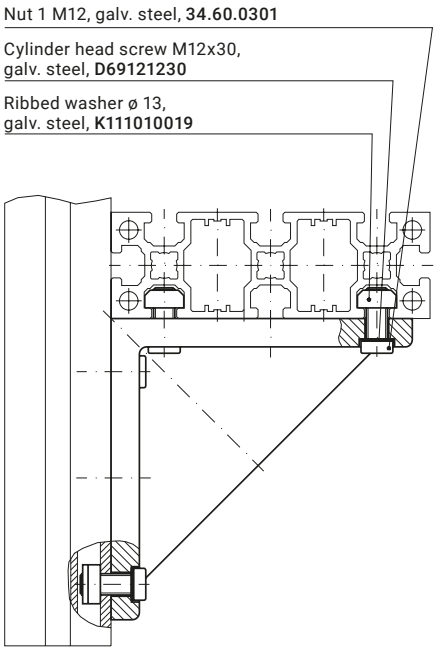

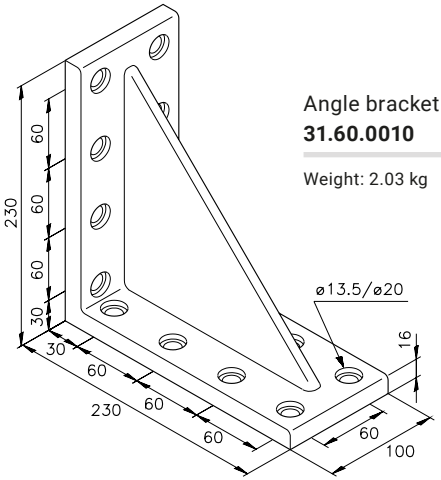

Angle bracket 60/7
31.60.0010

Weight: 2.03 kg

Angle Fasteners

30/45/60° Angles

The L (30°), M (45°) and N (60°) angles are ideal for reinforcing corners. In rectangular frame structures, you must always combine two M angles or one L angle and one N angle. This will make the profiles line up automatically.

Material: Tumbled aluminium

25 | 40 | 50 | 60 M8x20

Angle with and without key

Angle M25s

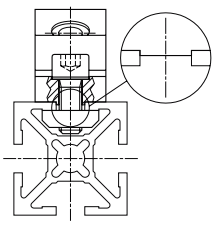

Angle M25

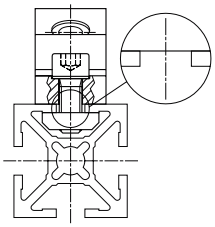

Fastening example

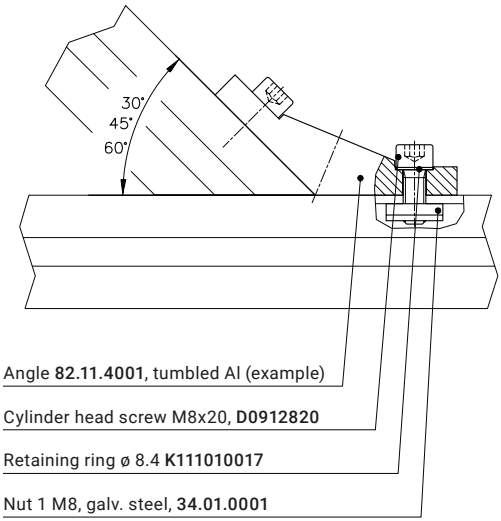

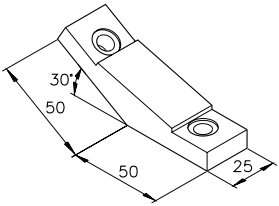

Angle L25
82.10.4001

Angle L25s
(with key)
82.10.4041

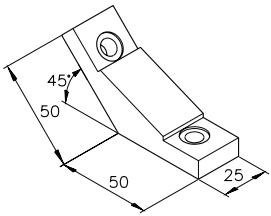

Angle M25
82.11.4001

Angle M25s
(with key)
82.11.4041

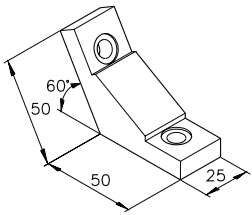

Angle N25
82.12.4001

Angle N25s
(with key)
82.12.4041

Adjustable Angle Brackets

Adjustable angle brackets make it possible to connect mk profiles at continuously variable angles.

Material: Tumbled aluminium

3

25 | 40 | 50 | 60 — M6x16

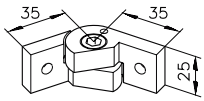

Adjustable angle bracket A25/1
B46.00.035

B46.00.025*

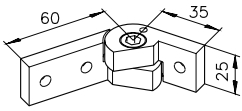

Adjustable angle bracket A25/2
B46.00.036

B46.00.026*

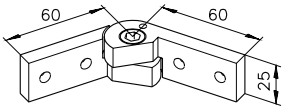

Adjustable angle bracket A25/3
B46.00.034

B46.00.024*

25 | 40 | 50 | 60 — M8x20

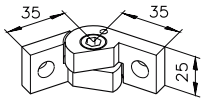

Adjustable angle bracket B25
B46.00.033

B46.00.021*

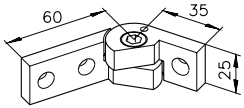

Adjustable angle bracket C25
B46.00.037

B46.00.027*

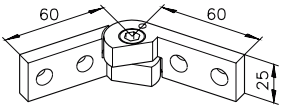

Adjustable angle bracket D25
B46.00.032

B46.00.020*

Fastening example Set B46.00.027

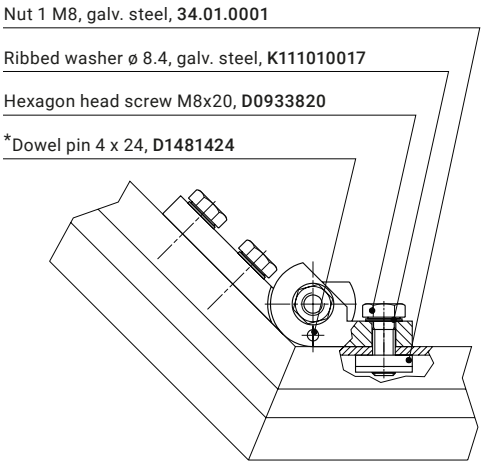

*If needed, the adjustable angle brackets can be easily dowelled. The dowel pin is included with delivery.

* Set with fastening accessories, contains appropriate quantities of screws, ribbed washers and nuts.

Plate Fasteners

Plate Fasteners

Depending on your installation situation, you can choose among straight plates, T-plates or angle plates. The plates have a pressed indentation to ensure that they do not twist in the slot.

Material: Tumbled aluminium

25 | 40 | 50 | 60 M5x10 Flanged button-head screw

Fastening example Set T25.50.3002

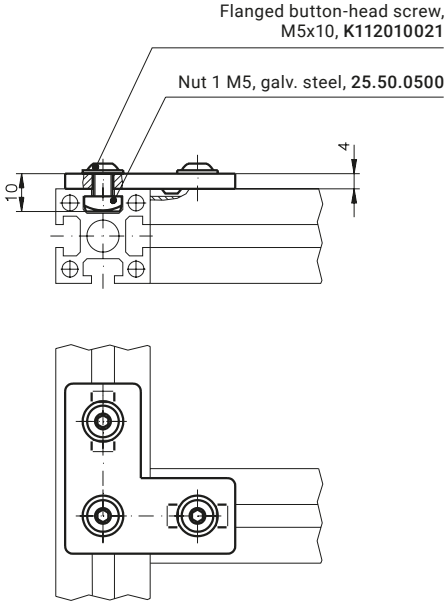

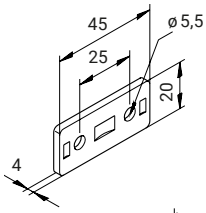

Straight plate 01
25.50.3000

T25.50.3000*

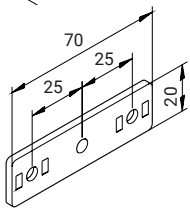

Straight plate 02
25.50.3001

T25.50.3001*

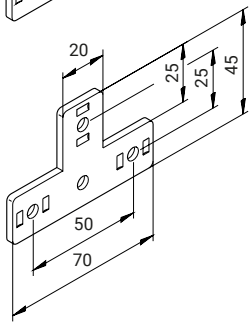

T-plate 01
25.50.3006

T25.50.3006*

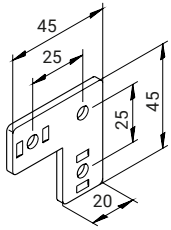

Angle plate 01
25.50.3002

T25.50.3002*

* Set with fastening accessories, contains appropriate quantities of screws, ribbed washers and nuts.

Plate Fasteners

Plate fasteners are also used to connect guard partitions. The inner slots remain unobstructed and can thus be used to attach panelling. Straight plate 05, shown here, can be used to connect two guard partitions without a gap.

Material: Tumbled aluminium

25 | **40** | 50 | 60

M8x12 Flanged button-head screw

Fastening example Set T50.05.0053

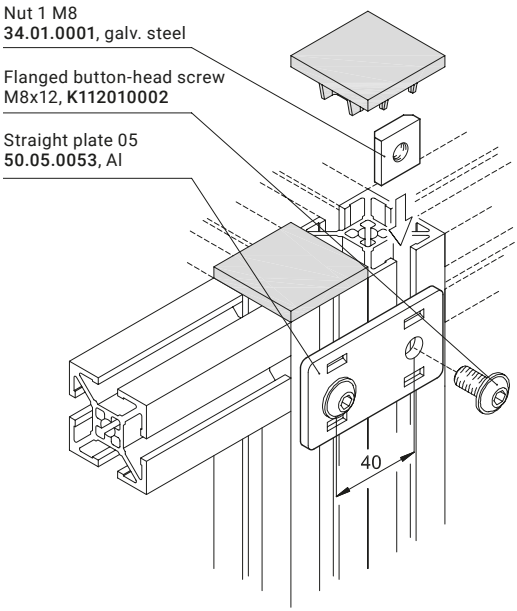

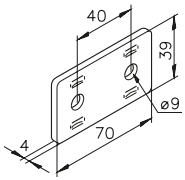

Straight plate 05
50.05.0053

T50.05.0053*

* Set with fastening accessories, contains appropriate quantities of screws, ribbed washers and nuts.

Plate Fasteners

Plate Fasteners

Plate fasteners with a plate thickness of 4 mm are designed for low to medium loads. Plates with a key ensure that profile paths are exactly aligned and that the connections do not twist in the slot.

Material: Tumbled aluminium

25 40 50 60 M8x12 Flanged button-head screw

Fastening example Set T50.05.0045

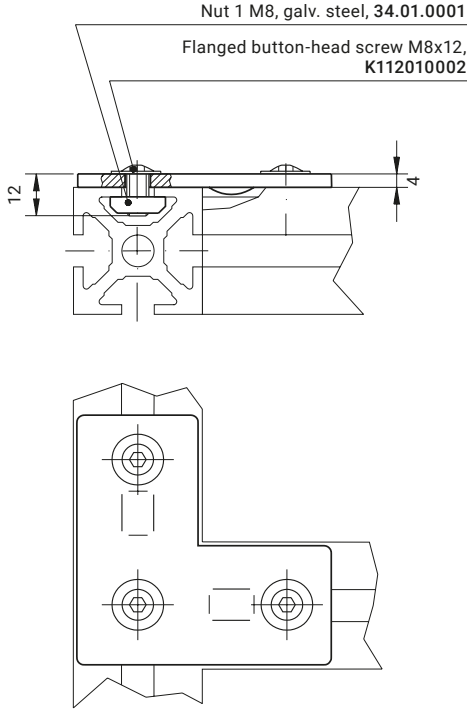

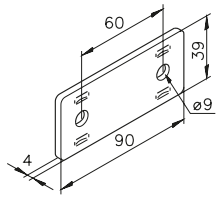

Straight plate 04
50.05.0077

T50.05.0077*

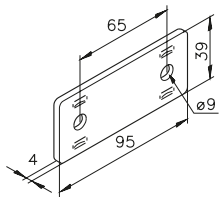

Straight plate 03
50.05.0052

T50.05.0052*

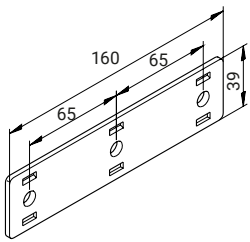

Straight plate 09
50.05.0070

T50.05.0070*

* Set with fastening accessories, contains appropriate quantities of screws, ribbed washers and nuts.

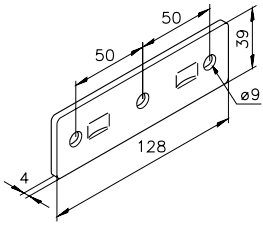

Straight plate 07
50.05.0047

T50.05.0047*

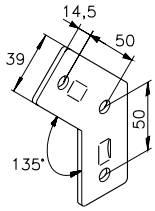

Angle plate 13
50.05.0051

T50.05.0051*

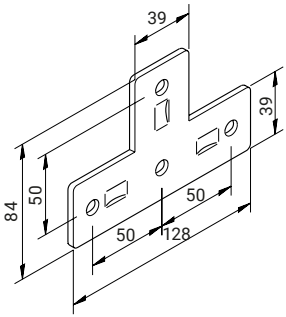

T-plate 03
50.05.0046

T50.05.0046*

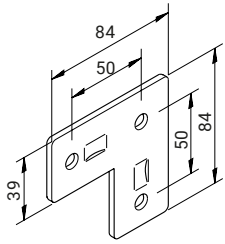

Angle plate 03
50.05.0045

T50.05.0045*

* Set with fastening accessories, contains appropriate quantities of screws, ribbed washers and nuts.

Plate Fasteners

Heavy-Duty Plate Fasteners

The heavy-duty plate fasteners have a plate thickness of 6 mm and are designed for higher loads.

Material: Tumbled aluminium

25 | **40** | 50 | 60 M8x16

Fastening example

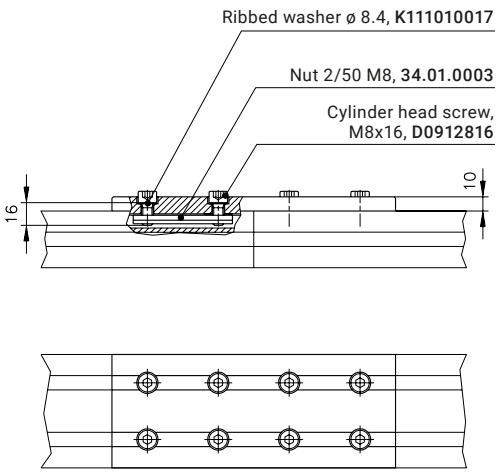

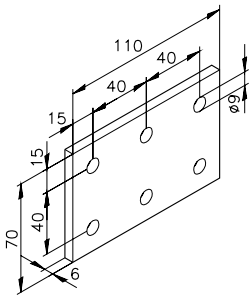

Connection plate 40/2
50.05.0060

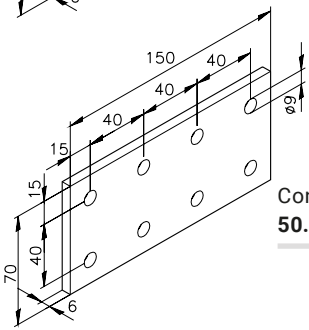

Connection plate 40/3
50.05.0061

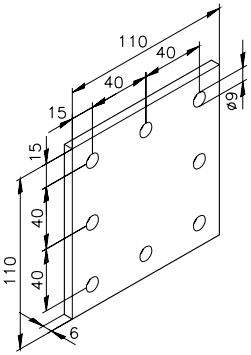

Connection plate 40/4
50.05.0062

Heavy-Duty Plate Fasteners

Plate fasteners made from profiles 3855 and 3856 have a special geometry to fit exactly into a 10 mm slot. This ensures that profiles are exactly aligned and that the connections do not twist in the slot.

Material: Anodised aluminium

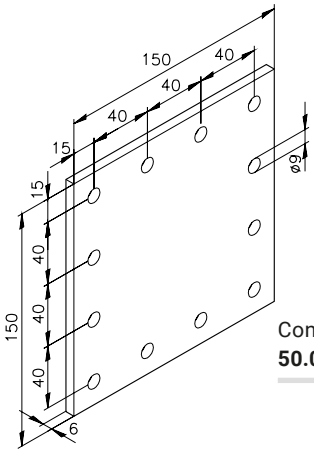

Connection plate 40/6
50.05.0064

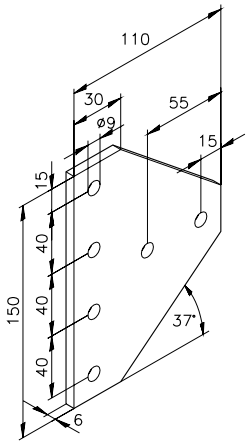

Connection plate 40/7
50.05.0065

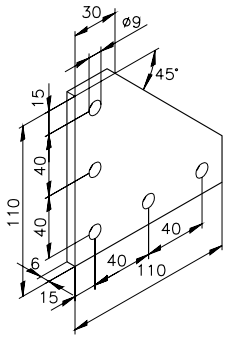

Connection plate 40/8
50.05.0066

M8x16

25 | 40 | 50 | 60

Profile 3855
3855BF0200

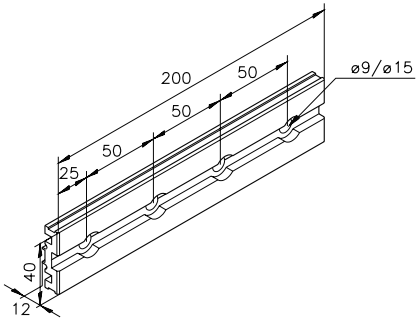

25 | 40 | 50 | 60

Profile 3856
3856BD0200

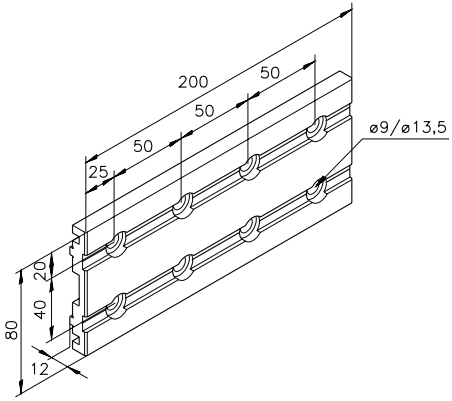

Plate Fasteners

Heavy-Duty Plate Fasteners

The heavy duty plate fasteners have a plate thickness of 6 mm and are designed for higher loads.

Material: Tumbled aluminium

25 | 40 | 50 | 60 M8x16

Fastening example

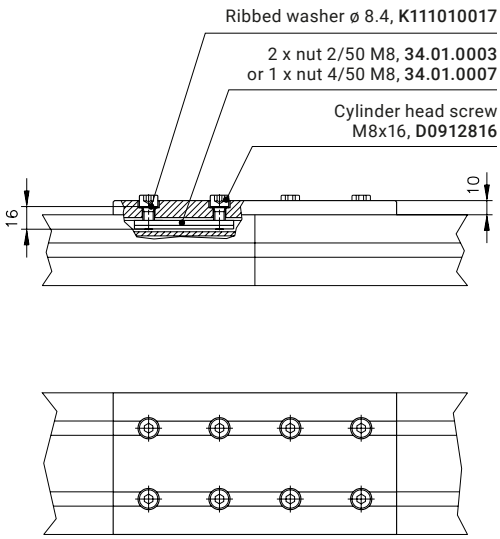

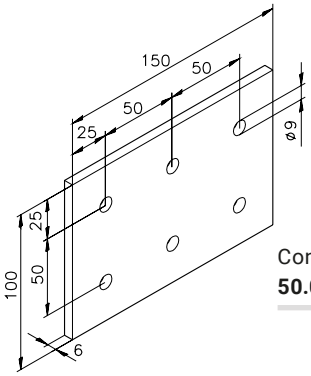

Connection plate 16
50.05.0016

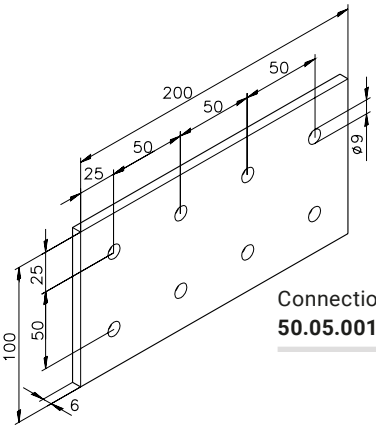

Connection plate 17
50.05.0017

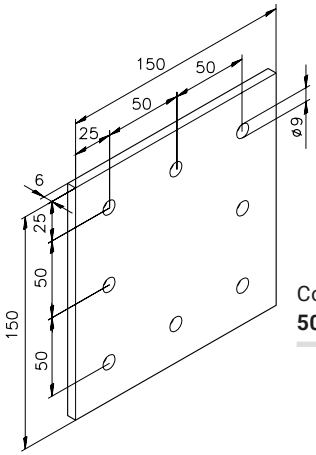

Connection plate 13
50.05.0013

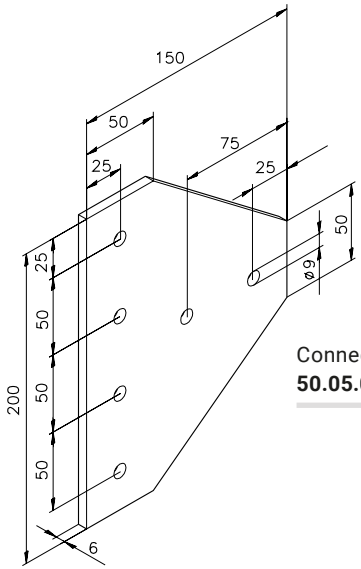

Connection plate 12
50.05.0012

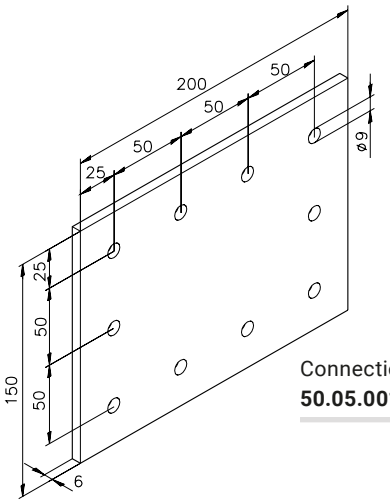

Connection plate 18
50.05.0018

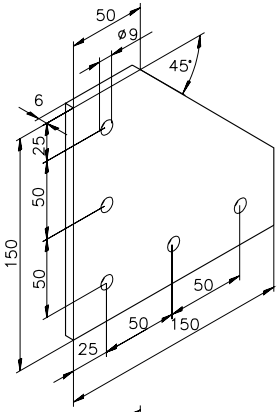

Connection plate 10
50.05.0010

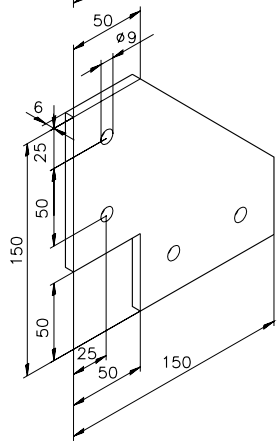

Connection plate 11
50.05.0011

Heavy-Duty Plate Fasteners

Plate fasteners made from profiles 3860 and 3861 have a special geometry to fit exactly into the 10 mm slot on a Series 50 profile. This ensures that profiles are exactly aligned and that the connections do not twist in the slot.

Material: Anodised aluminium

25 | 40 | **50** | 60

M8x16

Profile 3860
3860BD0200

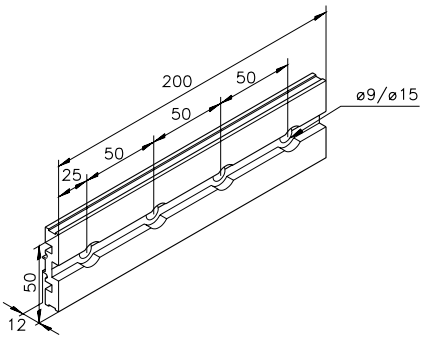

Profile 3861
3861BD0200

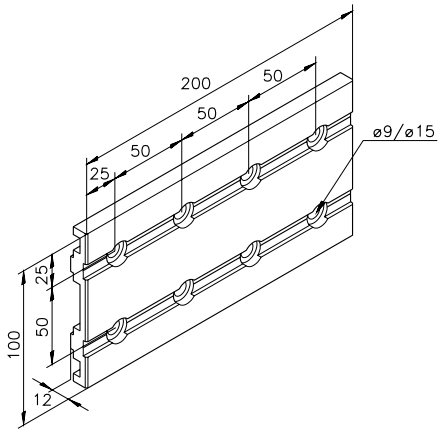

Heavy-Duty Plate Fasteners

Material: Tumbled aluminium

25 | 40 | 50 | **60**

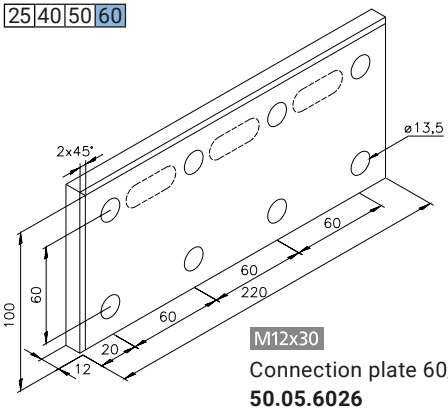

M12x30

Connection plate 60/26

50.05.6026

With 14 mm key slots for fixing plate in profile slot, for keys D6885A14940

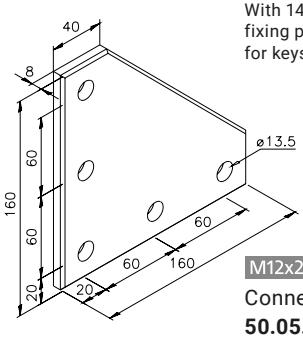

M12x25

Connection plate 60/10

50.05.6010

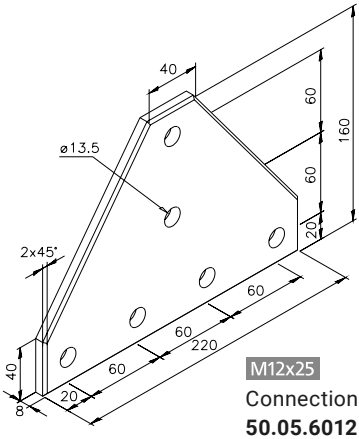

M12x25

Connection plate 60/12

50.05.6012

Fastening example

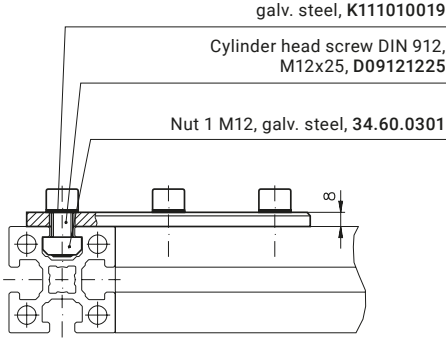

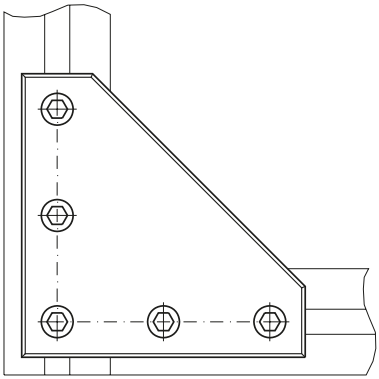

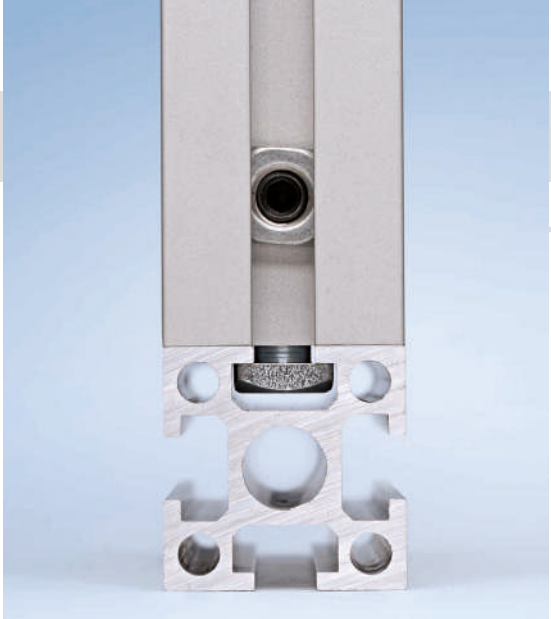

Internal Fasteners

Tension Plugs

Tension plugs are an alternative to angles when the slots must be left free for inserting panelling or when structures are to be created without visible connecting elements. Tension plugs are therefore often used with protective panels or in light-duty frame construction.

Material: Galvanised steel

Tools starting on page 334
End services starting on page 16

25 40 50 60

Fastening example

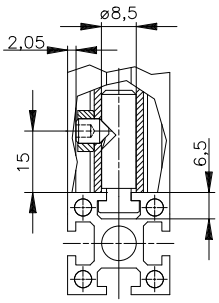

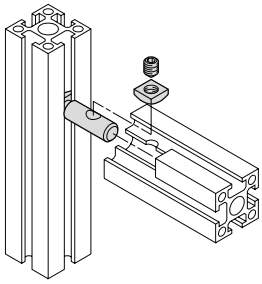

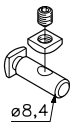

Tension plug
B51.03.009

End services BA, BB
(ø 5.8 mm bore to centre, 15 mm distance)

Screw Connections

Screw connections allow users to create profile structures using only standard parts. The connection requires an M8 thread in profile 1 (extra light duty profile) or an M8 threaded insert. In profile 2, a ø 10 mm bore is required at the spot of the connection to tighten the screw with an Allen key. For a seamless closure with an end cap, the bore should be 15 mm from the edge.

Assembly video screw connections
https://youtu.be/zjgKKTMhjWw

Tools starting on page 334
End services starting on page 16

25 40 50 60

Fastening example

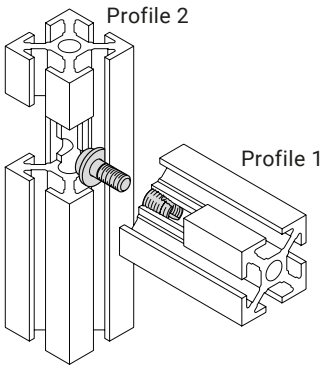

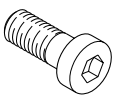

Cylinder head screw
M8x20
D6912820

DIN 6912, 8.8 galv. steel
D6912820A2

DIN 6912, 4.6 stainless steel

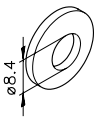

Tension washer
D67968

Galv. steel
D67968A2

Stainless steel

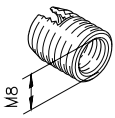

M8 threaded insert
K112030008

Galv. steel

(ø 10 mm through-bore)

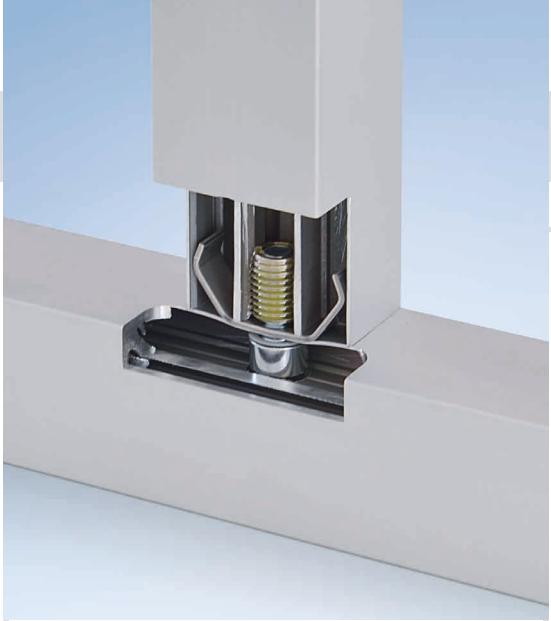

Internal Fasteners

Screw Connections

... for Cleanrooms

mk's cleanroom fastener is a fastener that securely connects Series 40 cleanroom profiles while also preventing twisting. The connector is clipped into the face of a profile equipped with a threaded insert. When the profiles are screwed together, the connector is pulled into the closed slot and displaces the removable material covering the slot. This produces a particularly close fit.

Tools starting on page 334
End services starting on page 16
Cleanroom Profiles on page 56

25 | 40 | 50 | 60

Fastening example

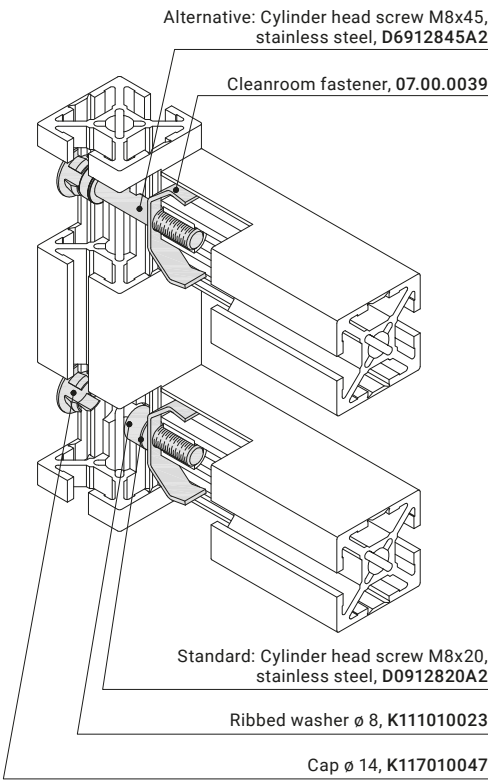

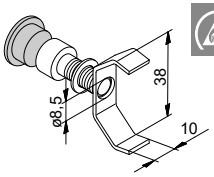

Cleanroom fastener
with silver cap
B51.03.100.SI

with black cap
B51.03.100.SW

Including screw,
ribbed washer and cap

Tools starting on page 334
End services starting on page 16

Tension Plugs

Tension plugs are an alternative to angles when structures need to have hidden connecting elements and unobstructed slots. As an alternative to the tension plugs listed below, you can also use tension plugs with a thrust part; see the following page. The plugs with thrust parts are more versatile and have additional benefits, but they have a smaller contact surface in the slot than the connectors shown here.

Assembly video tension plugs
https://youtu.be/MUjiEZwmOvQ

25 | 40 | 50 | 60

Fastening example

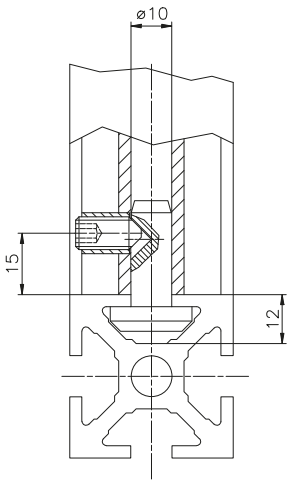

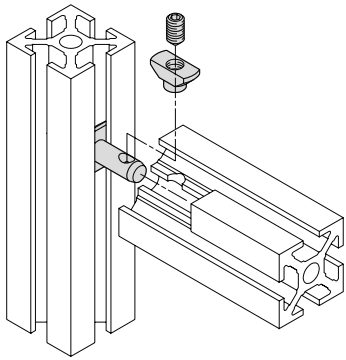

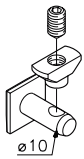

Tension plug
B51.03.004

Galv. steel

B51.03.030

Stainless steel

End services BA, BB
(ø 10 mm bore to centre, 15 mm distance)

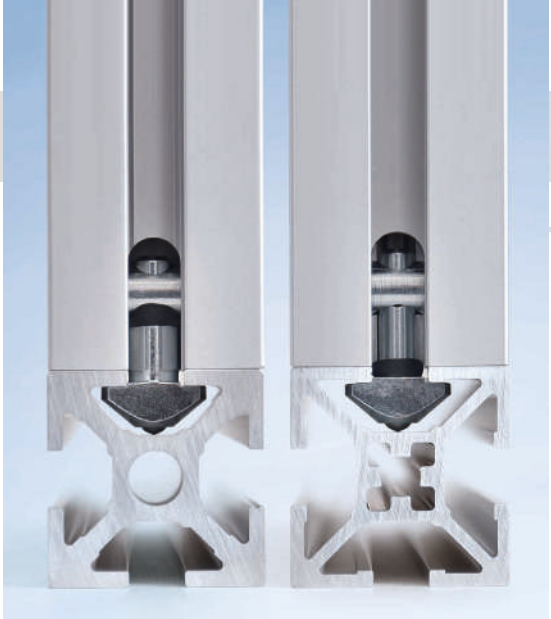

Internal Fasteners

Tension Plugs

... with Thrust Part

Tension plugs with a thrust part are ideally suited for frame structures containing panelling, since all slots remain free. The tension plugs also allow profiles to be retrofitted onto existing structures, even if the faces of the profiles are already sealed. The connector is fastened in the slot using the thrust part (ball with spring), which eases mounting in a vertical position and provides an additional mounting option.

Material: Galvanised steel

Tools starting on page 334
End services starting on page 16

Assembly video tension plugs
https://youtu.be/59hvmgZ_w5E

25 | **40** | 50 | 60

Fastening example

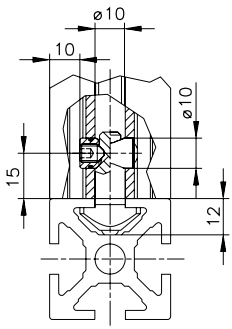

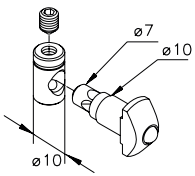

Tension plug
B51.03.040

for series 40 profiles,
light duty and normal

End services BV, BW
(ø 10 mm through-bore, 15 mm distance)

Fastening example

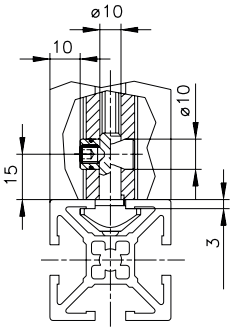

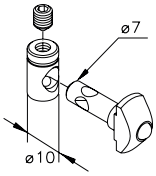

Tension plug
B51.03.041

for series 40 profiles,
extra light duty

End services BV, BW
(ø 10 mm through-bore, 15 mm distance)

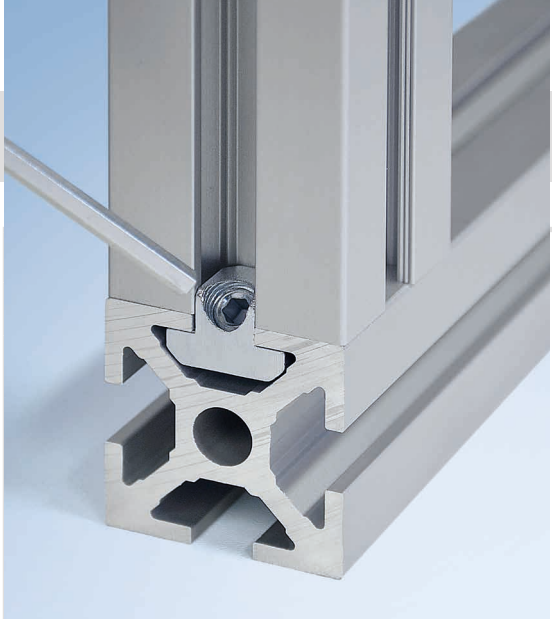

Tension Plugs S

The Tension plug S creates quick, strong and easy aluminum profile structures with no obstructing edges. The ribbing on the contact surface ensures that the connections are conductive (ESD). One T-slot remains completely open, allowing panelling to be inserted into the slot. The Tension plug S was specially developed to connect mk Series 40 aluminium profiles on the face side. The connector requires little installation work, as only one central bore is required.

Material: Galvanised steel

Tools starting on page 334
End services starting on page 16

Assembly video tension plugs
https://youtu.be/9c9cS95ym04

Fastening example

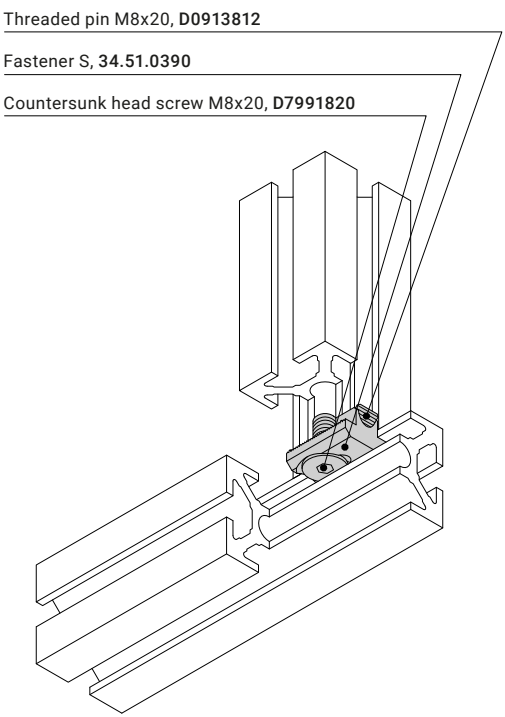

25 | 40 | 50 | 60

M8x20

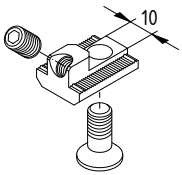

Tension plug S
B51.03.090*

*Set with fastening accessories threaded pin and countersunk head screw

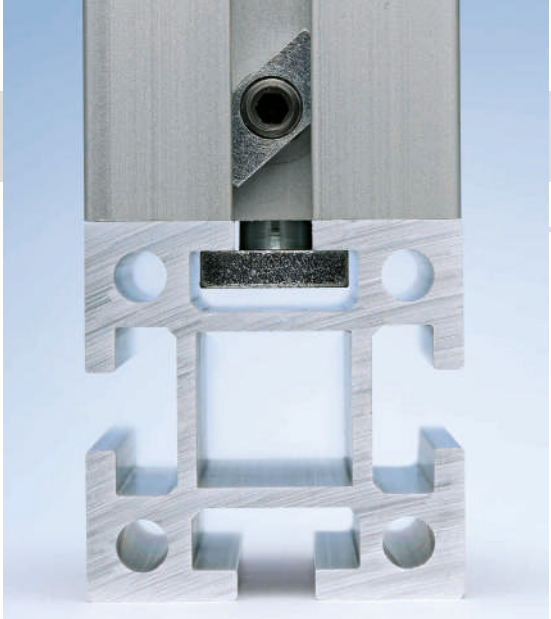

Internal Fasteners

Tension Plugs

A tension plug is also available for Series 50 structures that require hidden connecting elements and unobstructed slots. The tension plug features a high load capacity and standardised end machining. Only the profile in which the front end of the tension plug is inserted contains a bore at the defined distance. This profile can be inserted into another profile and attached to the desired area without additional machining.

Material: Galvanised steel

Tools starting on page 334
End services starting on page 16

25	40	50	60

Fastening example

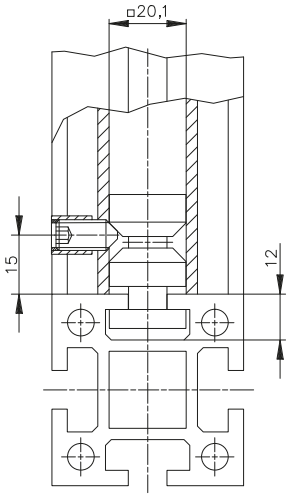

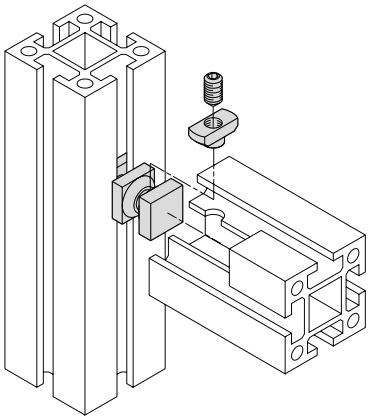

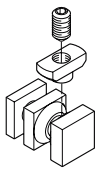

Tension plug
B51.03.006

End services BF, BG
(ø 10 mm bore to centre, 15 mm distance)

Anchor Fasteners

Anchor fasteners are an innovative type of hidden connector that can be used without profile machining. They enable you to create profile structures with no obstructing edges and, moreover, do not require profile machining. They are slid into the ø 10 mm bore of a Series 40 profile and clamped using a screw. The side anchors are used to fasten the connector to the other profile while also preventing twisting.

Material: Galvanised steel

Assembly video anchor fasteners
https://youtu.be/HTI7_0YNikY

25 | **40** | 50 | 60

Fastening example

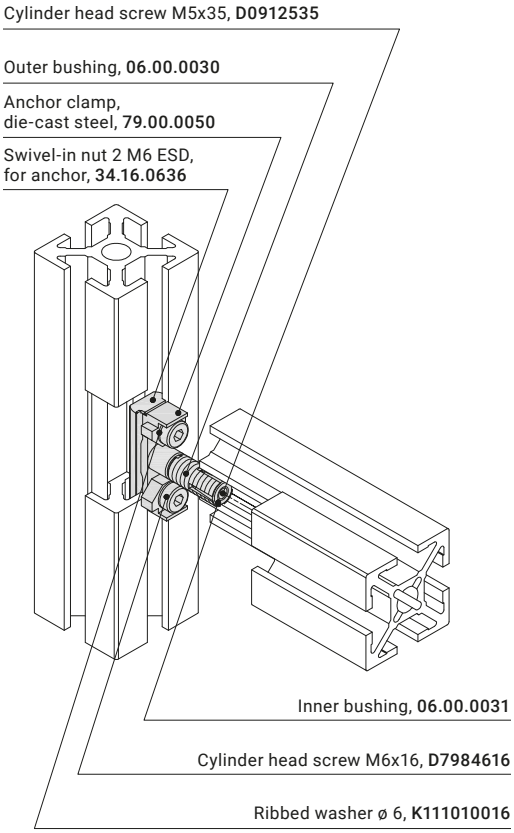

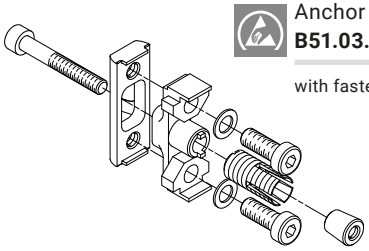

Anchor fastener
B51.03.050

with fastening accessories

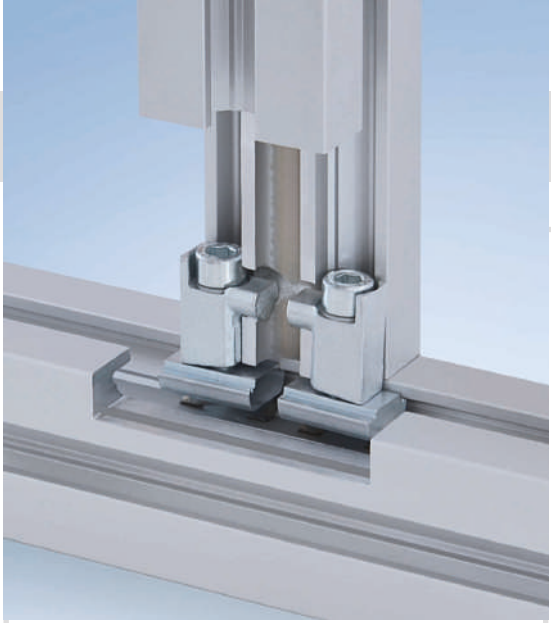

Internal Fasteners

Clamping Jaws

Clamping jaws are a versatile and hidden connection for Series 40 and Series 50 profiles. The screw can be easily tightened in the slot and they are suitable for later mounting in existing structures, making them appropriate for a wide range of applications. They can be used in profiles with two, four, eight or even “n” slots. The connection requires standard end service with a ø 10 mm bore that is 15 mm from the edge for Series 40 and 14 mm from the edge for Series 50.

Material: Galvanised steel

Tools starting on page 334
End services starting on page 16

25 | 40 | 50 | 60 M6x25

Fastening example

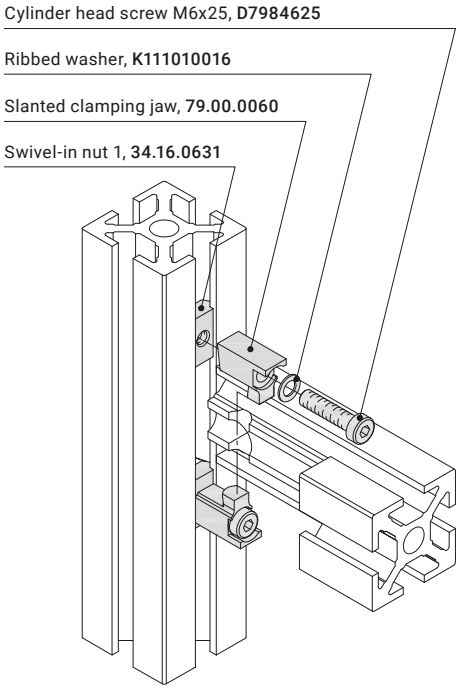

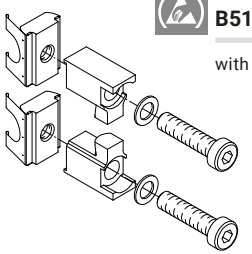

Clamping jaw
B51.03.060

with fastening accessories

Dimensional sketch

Series 40

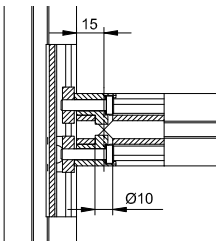

Series 50

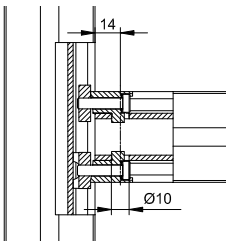

Series 40 end services BV, BW (15 mm distance)
Series 50 end services BF, BG (15 mm distance)
(ø 10 mm through-bore)

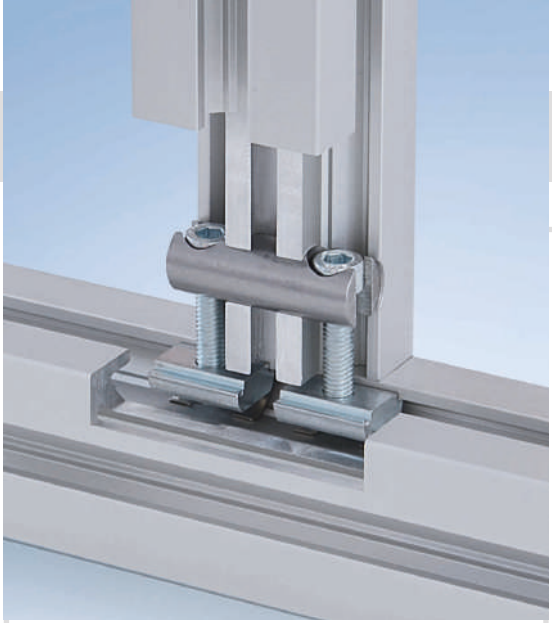

Bolt Fasteners

Bolt fasteners are compact and highly stable connectors. They are ideal for applications where you need a sturdy connection but want to avoid the obstructing edge produced by an angle. In order to use the bolt fastener, end service is required to provide a ø 14 mm bore at a distance of 20 mm from the edge. Different versions allow you to use the connectors in Series 40 and Series 50 profiles.

Material: Galvanised steel

End services starting on page 16

Fastening example

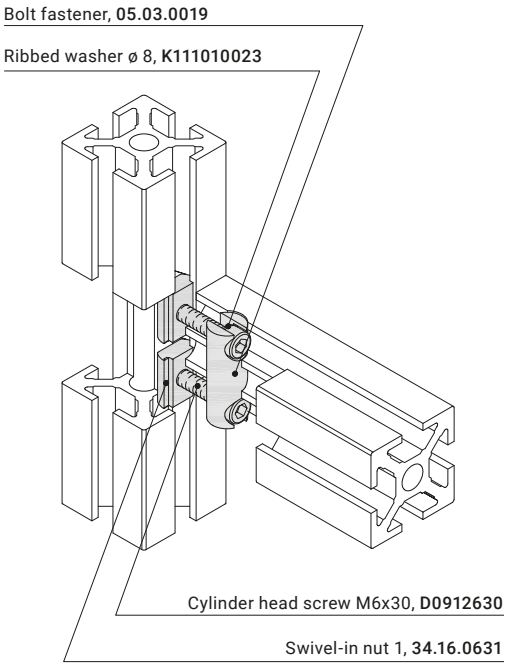

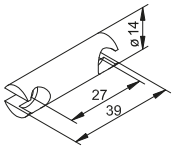

25 **40** 50 60

Bolt fastener 40
B51.03.070SI*

B51.03.070SW*

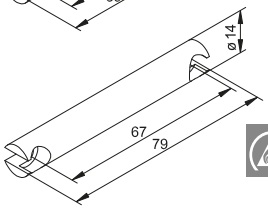

25 **40** 50 60

Bolt fastener 80
B51.03.071SI*

B51.03.071SW*

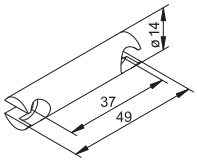

25 40 **50** 60

Bolt fastener 50
B51.03.073SI*

B51.03.073SW*

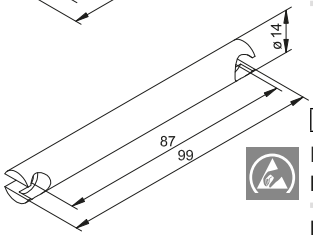

25 40 **50** 60

Bolt fastener 100
B51.03.074SI*

B51.03.074SW*

End services BY, BZ
(ø 14,1 mm through-bore, 20 mm distance)

*With fastening accessories and cap (SI = silver, SW = black)

Internal Fasteners

Hinge Tension Plugs

You can use hinge tension plugs to connect mitre-cut profiles at their faces. Profiles can be connected at all angles within +- 90°. The connection requires a single-side bore in both profiles on the chamfered side, 15 mm from the centre of the cut edge. The single-side bore must be ø 5.8 for Series 25 hinge tension plugs, and ø 10 for Series 40.

Material: Galvanised steel

Tools starting on page 334
End services starting on page 16

Fastening example

Series 25 hinge tension plug,
galv. steel, **B51.03.010**

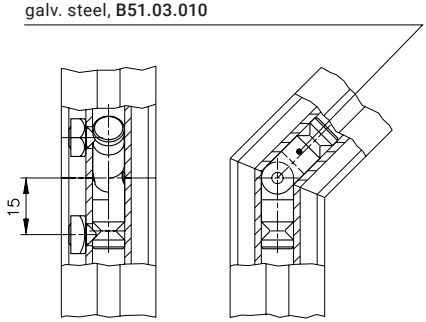

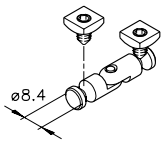

25 | 40 | 50 | 60

Hinge tension plug
B51.03.010

+- 90°

(ø 5.8 mm bore to centre, 15 mm distance)

Fastening example

Series 40 hinge tension plug,
galv. steel, **B51.03.011**

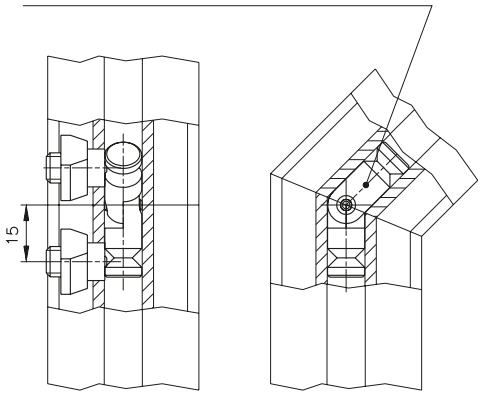

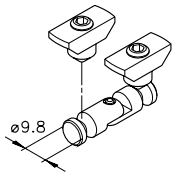

25 | 40 | 50 | 60

Hinge tension plug
B51.03.011

+- 90°

(ø 10 mm bore to centre, 15 mm distance)

Tension Plugs, Front Side

The tension plugs displayed here create gap-free connections between the faces of Series 40 profiles. In contrast to plate fasteners, all slots on the profiles remain free.

Material: Galvanised steel

25 | **40** | 50 | 60

Tools starting on page 334
End services starting on page 16

Fastening example

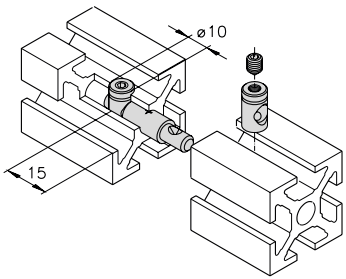

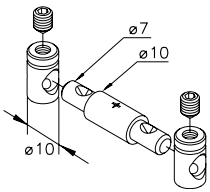

Tension plug, front side
B51.03.043

for series 40 profiles, light duty and normal

Fastening example

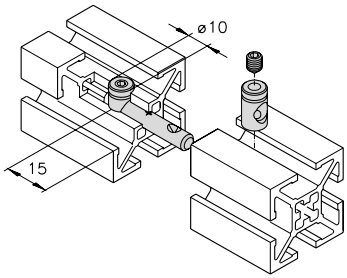

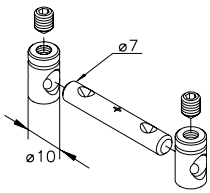

Tension plug, front side
B51.03.044

for series 40 profiles, extra light duty

(ø 10 mm through-bore)

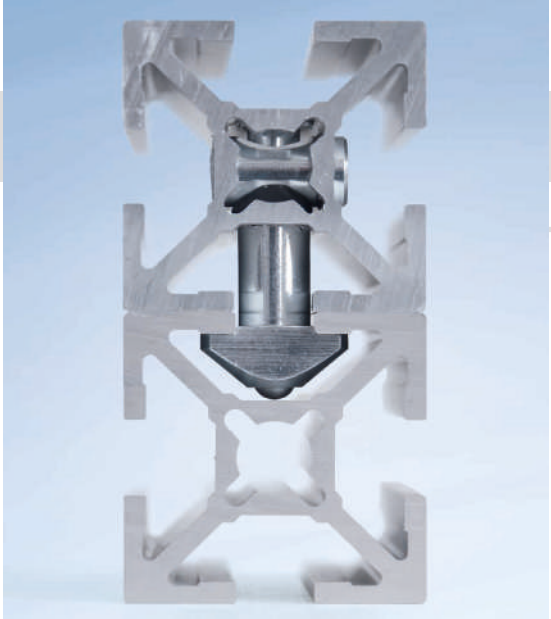

Internal Fasteners

Parallel Connectors

The tension plugs pictured here connect two profiles paraxially and seamlessly. The connector is fastened in the slot using the tension part (ball with spring), which eases mounting in a vertical position. To be able to use the parallel connector, you have to drill an additional bore that is 90° to the through-bore; see the fastening example. A second connector ensures protection against twisting. Generally, a tension plug should be set at least every 1,000 mm.

Material: Galvanised steel

Tools starting on page 334
End services starting on page 16

25 | 40 | 50 | 60

Fastening example

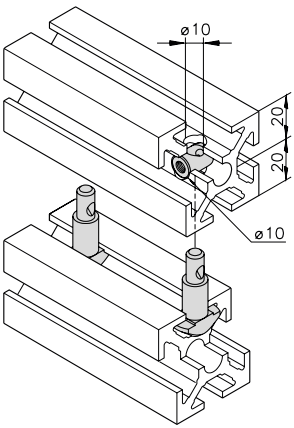

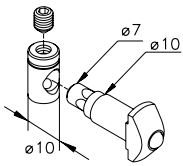

Tension plug, parallel
B51.03.042

(ø 10 mm through-bore)

Parallel Connectors

... Paraxial or Angled

Parallel connectors made from a countersunk nut, screws and a standard nut can be used to create a gap-free connection between two profiles, either paraxial or at an angle of your choosing (single parallel connector only). In the profile to which you are connecting, one or two ø 10 mm bores are required at the spot of the connection to tighten the screw with an Allen key.

Material: Galvanised steel

Tools starting on page 334

25 | 40 | 50 | 60

M8x20

Fastening example for B51.03.055

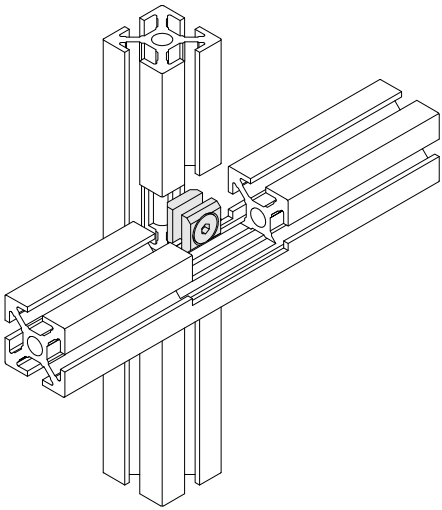

Fastening example for B51.03.056

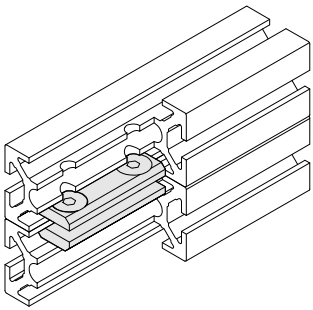

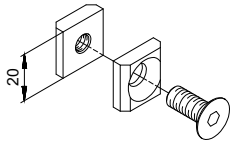

Parallel connector 1 M8
B51.03.055*

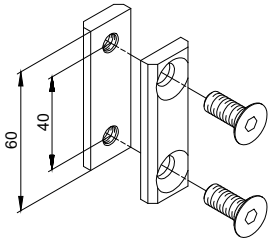

Parallel connector 2/40 M8
B51.03.056*

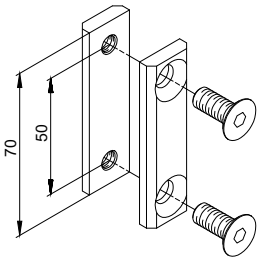

Parallel connector 2/50 M8
B51.03.057*

(ø 10 mm through-bore)

*With fastening accessories

Corner Block Joints

Corner Blocks

Corner blocks connect profile faces at corner joints. They produce smooth, aesthetically pleasing structures. The profile slots remain unobstructed on all sides. Open corner blocks are fastened using standard screws, while closed corner blocks are fastened with the included internal fastener.

Material: Tumbled aluminium

25 | 40 | 50 | 60 M6x16

Tools starting on page 334
End services starting on page 16

Fastening example with open corner blocks

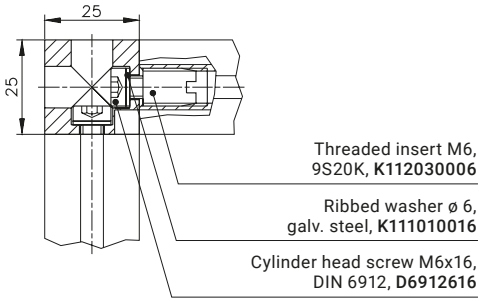

Fastening example for closed corner blocks

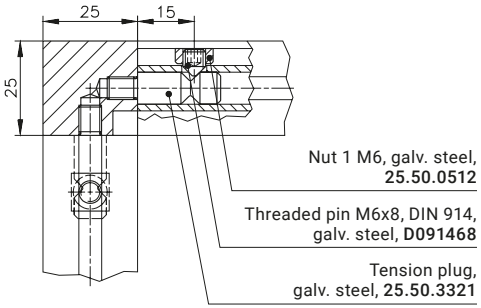

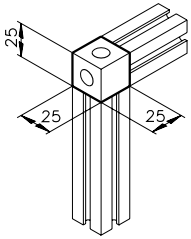

Corner block 25
25.50.3300

Connects 2 x mk 2025.01 (25x25) profiles (example)

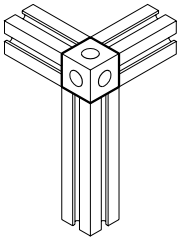

Corner block 26
25.50.3301

Connects 3 x mk 2025.01 (25x25) profiles (example)

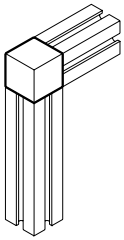

Corner block 30
B46.05.001*

Connects 2 x mk 2025.01 (25x25) profiles (example)

*With fastening accessories

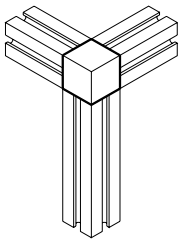

Corner block 31
B46.05.002*

Connects 3 x
mk 2025.01 (25x25)
profiles (example)

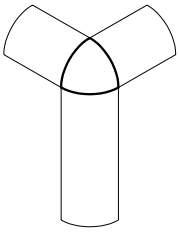

Corner block 32
B46.05.003*

Connects 3 x
mk 2025.37
profiles (example)

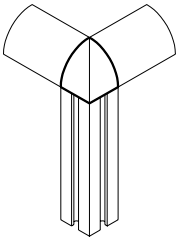

Corner block 33
B46.05.004*

Connects 1 x mk 2025.01
(25x25) profile and
2 x mk 2025.37 profiles
(examples)

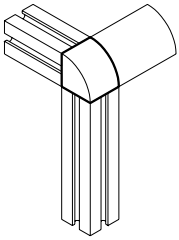

Corner block 34
B46.05.005*

Connects 2 x mk 2025.01
(25x25) profiles and
1 x mk 2025.37 profile
(examples)

(ø 5,8 mm bore to centre, 15 mm distance)

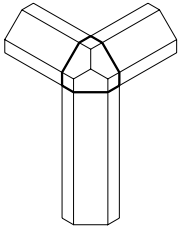

Corner block 35
B46.05.006*

Connects 3 x mk 2025.38
profiles (example)

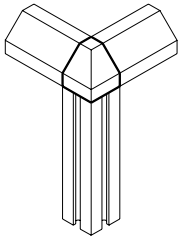

Corner block 36
B46.05.007*

Connects 1 x mk 2025.01
(25x25) profile and
2 x mk 2025.38 profiles
(examples)

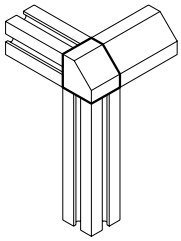

Corner block 37
B46.05.008*

Connects 2 x mk 2025.01
(25x25) profiles and
1 x mk 2025.38 profile
(examples)

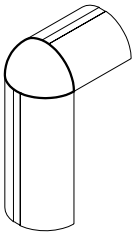

Corner block 38
B46.05.009*

Connects 2 x mk 2025.39
profiles (example)

(ø 5,8 mm bore to centre, 15 mm distance)

*With fastening accessories

Corner Block Joints

Corner Blocks

Corner blocks connect profile faces at corner joints. They produce smooth, aesthetically pleasing structures. The profile slots remain unobstructed on all sides. Open corner blocks are fastened using standard screws, while closed corner blocks are fastened with the included internal fastener.

Material: Tumbled aluminium

Assembly video open corner blocks
https://youtu.be/aiMQ8mmSyNc

Assembly video closed corner blocks
https://youtu.be/9c9cS95ym04

Tools starting on page 334
End services starting on page 16

25 | 40 | 50 | 60 | M8x20

Fastening example with open corner blocks

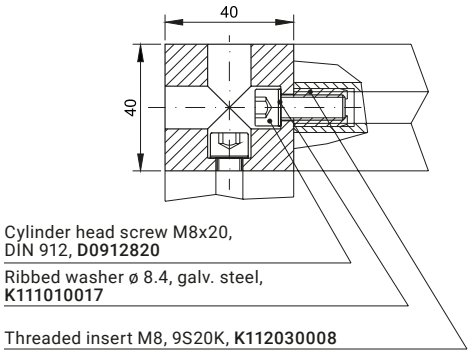

Fastening example for closed corner blocks

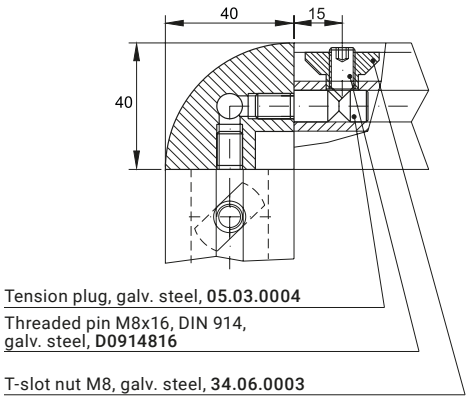

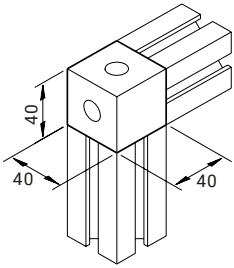

Corner block 6
79.01.0006

Connects 2 x mk 2040.01 (40x40) profiles (example)

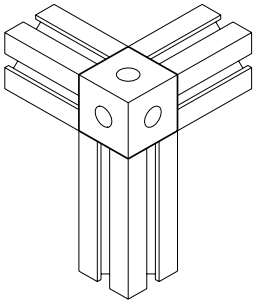

Corner block 5
79.01.0005

Connects 3 x mk 2040.01 (40x40) profiles (example)

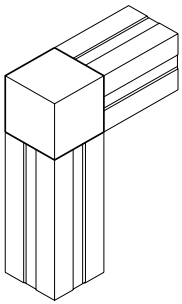

Corner block 40
B46.05.041*

Connects 2 x mk 2040.11 (40x40) profiles (example)

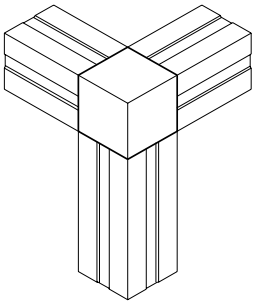

Corner block 39
B46.05.040*

Connects 3 x mk 2040.11 (40x40) profiles

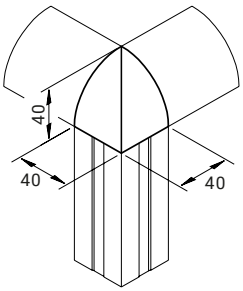

Corner block 42
B46.05.043*

Connects 2 x mk 2040.15 profiles and 1 x mk 2040.01 (40x40) profile (example)

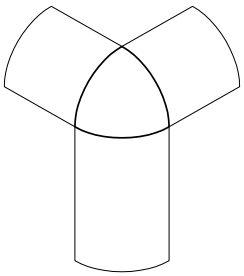

Corner block 41
B46.05.042*

Connects 3 x mk 2040.15 profiles

(ø 10 mm bore to centre, 15 mm distance)

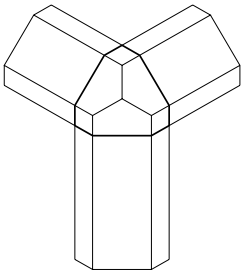

Corner block 43
B46.05.044*

Connects 3 x mk 2040.14 profiles

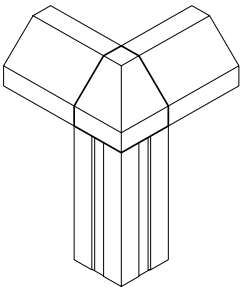

Corner block 44
B46.05.045*

Connects 2 x mk 2040.14 profiles and 1 x mk 2040.01 (40x40) profile (example)

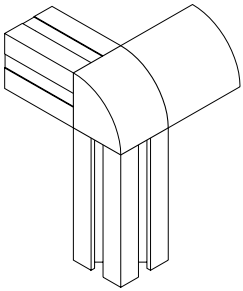

Corner block 46
B46.05.039*

Connects 2 x mk 2040.11 (40x40) profiles and 1 x mk 2040.15 profile (example)

(ø 10 mm bore to centre, 15 mm distance)

*With fastening accessories

Corner Block Joints

Corner Blocks

Corner block 48 below can be connected to mk 2040.19 profiles to create aesthetically pleasing connections at 45° or 135° angles, allowing you to build even complex structures.

Material: Tumbled aluminium

Tools starting on page 334
End services starting on page 16

25 **40** 50 60 M8x20

Fastening example

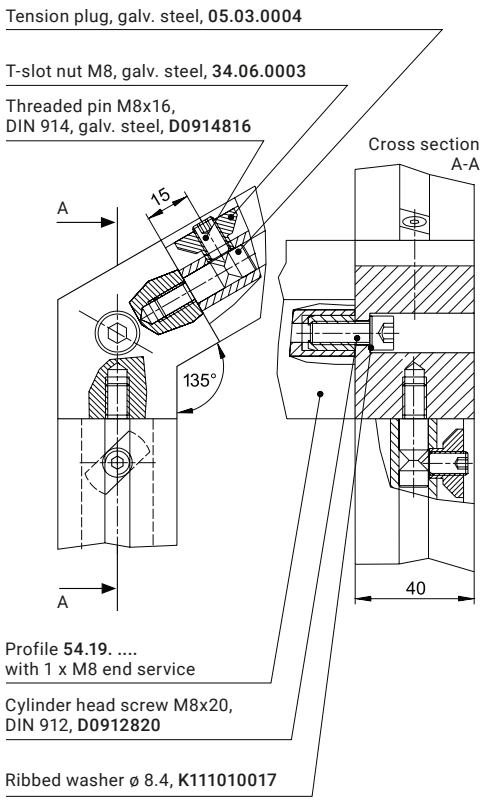

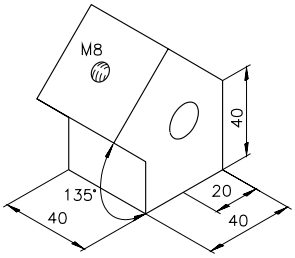

Corner block 48
B46.05.048*

for mk 2040.19 profiles

(ø 10 mm bore to centre, 15 mm distance)

*With fastening accessories

Corner Blocks

Corner blocks connect profile faces at corner joints. They produce smooth, aesthetically pleasing structures. The profile slots remain unobstructed on all sides. To connect mk 2000 (50x50) profiles, holder 5 is also inserted in the profile and screwed in place; see the fastening example on page 126.

Material: Tumbled aluminium

Tools starting on page 334
End services starting on page 16

25 40 **50** 60 M8x20

Fastening example for mk 2003 profiles

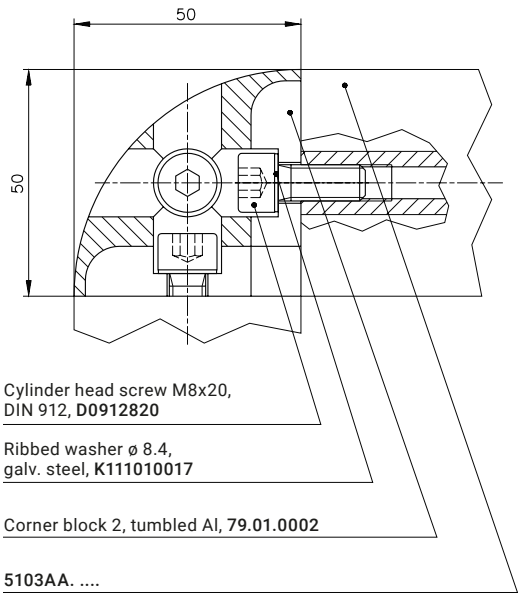

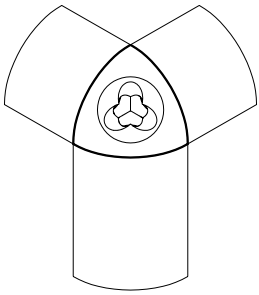

Corner block 1
79.01.0001

Connects 3 x mk 2003 profiles

B51.03.003

with cap

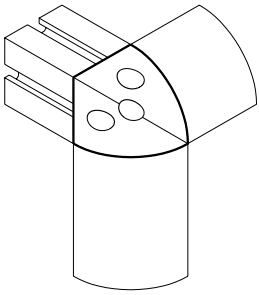

Corner block 2
79.01.0002

Connects 1 x mk 2000 (50x50) profile and 2 x mk 2003 profiles (example)

Corner Block Joints

Corner Blocks

Corner blocks connect profile faces at corner joints. They produce smooth, aesthetically pleasing structures. The profile slots remain unobstructed on all sides. To connect mk 2000 (50x50) profiles, holder 5 is also inserted in the profile and screwed in place; see the fastening example.

Material: Tumbled aluminium

Tools starting on page 334
End services starting on page 16

25 40 **50** 60 M8x20

Fastening example for mk 2000 (50x50) profiles

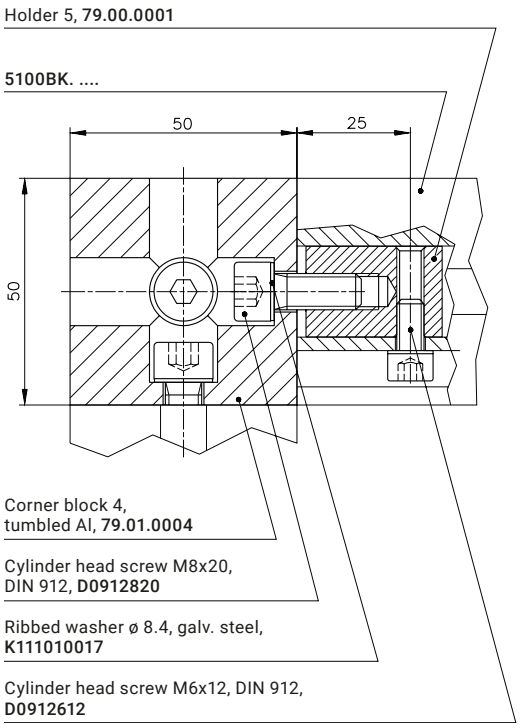

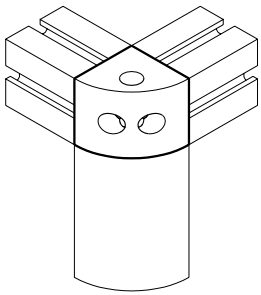

Corner block 3
79.01.0003

Connects 2 x mk 2000 (50x50) profiles and 1 x mk 2003 profile (example)

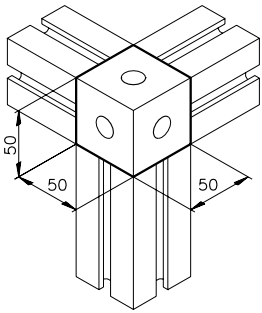

Corner block 4
79.01.0004

Connects 3 x mk 2000 (50x50) profiles (example)

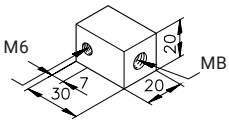

Holder 5
79.00.0001

Truss Blocks

Truss blocks were specially developed to reinforce frames, frame structures, substructures, platforms, etc. and eliminate the need to mitre-cut the profiles. A rectangular connection requires two 45° truss blocks or one 30° and one 60° truss block. Various profiles can be used, for example the mk 2040.01 (40x40).

Material: Tumbled aluminium

Fastening example

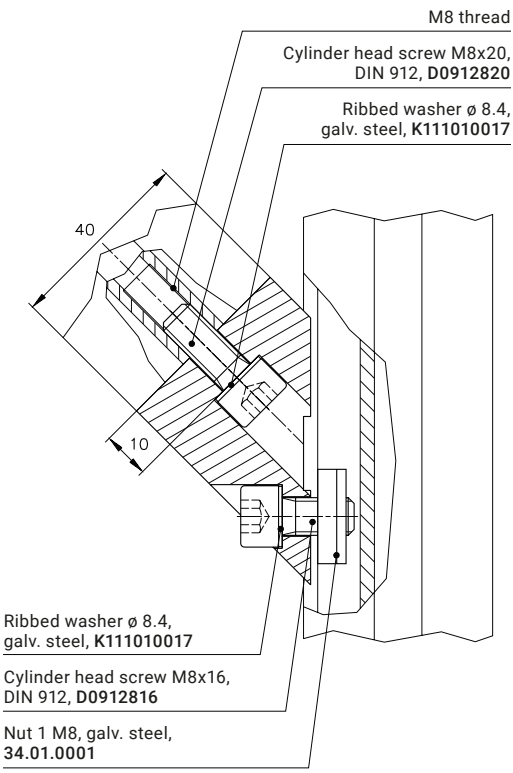

25 | **40** | 50 | 60

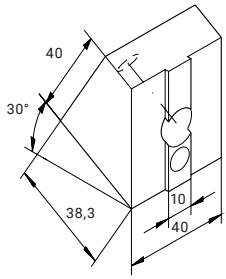

30° block
79.01.0062

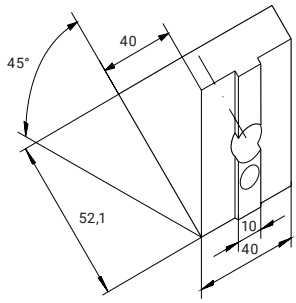

45° block
79.01.0066

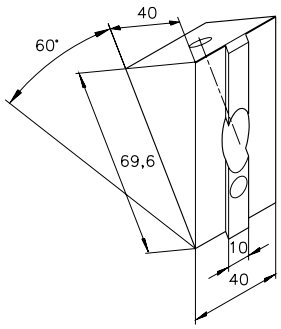

60° block
79.01.0068

Corner Block Joints

Truss Blocks

The truss blocks shown below allow you to create beam structures of any height and with combinations of different profiles. This allows large distances to be overcome and heavy loads to be carried. They can be used to build linear axis gantries, as well as for exhibit construction, etc. Describe your application to us and we'll supply you with the right truss along with the corresponding calculation.

Material: Tumbled aluminium

Truss beam

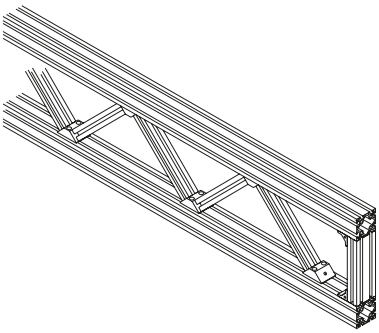

Example:

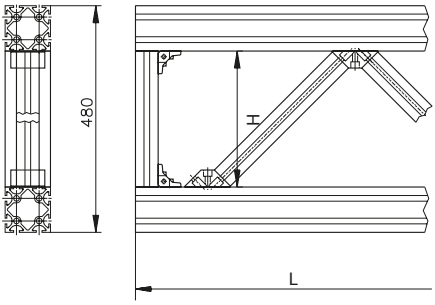

Box truss

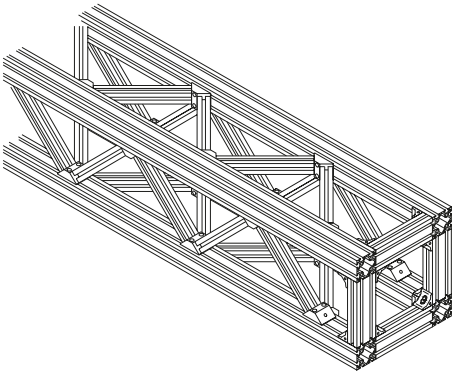

Top and bottom profiles	mk 2040.03 (80x80)
Strut profiles	mk 2040.01 (40x40)

Ix	16,794.00 cm^4
Iy	643.00 cm^4
Wx	705.00 cm^3
Wy	87.00 cm^3

Strut length $= \sqrt{2} \cdot (H - 31.7)$ for strut 40

$= \sqrt{2} \cdot (H - 22.3)$ for strut 25

Number of struts $\approx \frac{L}{H}$

Fastening example 79.01.0052

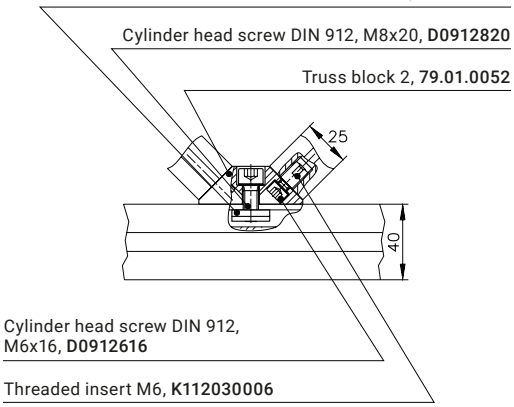

Fastening example 79.01.0055

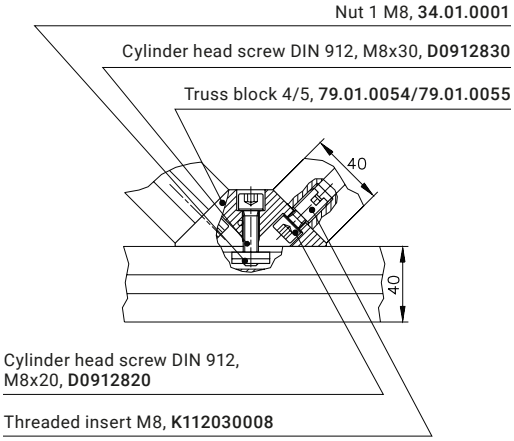

Truss blocks for adapting Series 25 profiles to Series 40/50 profiles

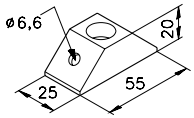

25 40 50 60

Truss block 2
79.01.0052

for 2 x profile
mk 2025.01 (25x25)

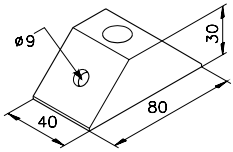

25 40 50 60

Truss block 4
79.01.0054

for 2 x profile
mk 2040.01 (40x40)

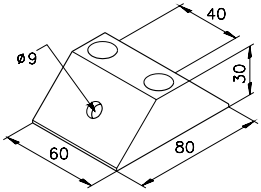

25 40 50 60

Truss block 5
79.01.0055

for 2 x profile
mk 2040.01 (40x40)

Profile Clamps

mk clamps without a key can be used to connect profiles quickly, securely and at any angle. Clamps with a key ensure that the profiles remain rectangularly aligned. Arranging two clamps in opposite positions prevents the profiles from twisting.

Material: Tumbled aluminium

25 40 50 60 M5x12

Fastening example

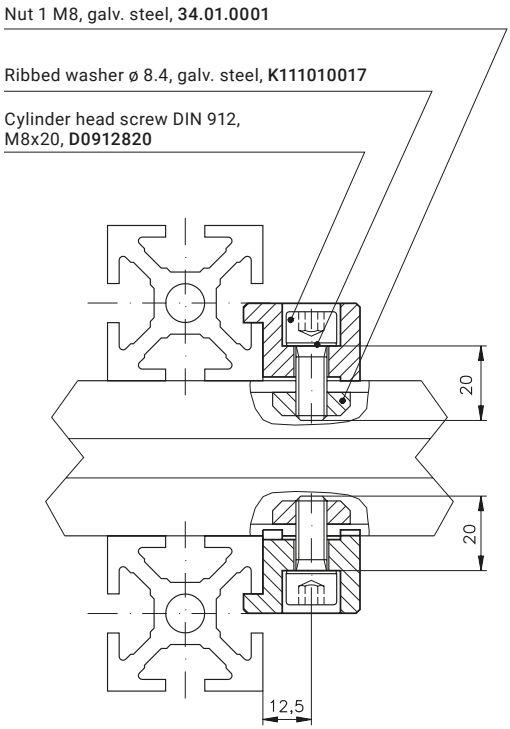

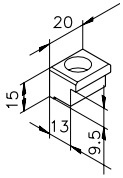

Clamp 25/0
25.50.7000

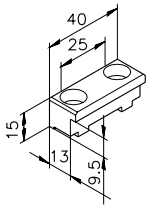

Clamp 25/2
25.50.7002

6 mm key width

Adapter clamp for adapting Series 25 profiles to Series 40/50 profiles

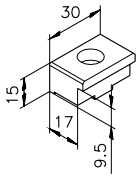

25 40 50 60 M6x16

Clamp 40/25
30.00.0048

10 mm key width

25 **40** 50 60 M8x20

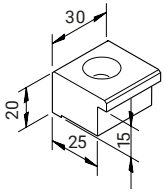

Clamp 5/30
30.00.0033

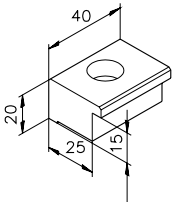

Clamp 5/40
30.00.0034

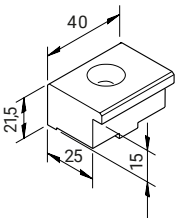

Clamp 6/40
30.00.0036

10 mm key width

25 40 **50** 60 M8x25

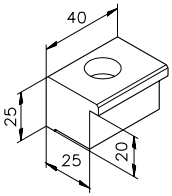

Clamp 1/40
30.00.0027

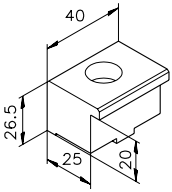

Clamp 2/40
30.00.0029

10 mm key width

Series D28 Connectors

D28 90° Angle Fasteners

The D28 T-connector consists of two pre-assembled half shells and is attached using a screw-clamp connection on the longitudinal key of the mk 2279 profile and face of the mk 2279/2280 profiles.

The D28 corner fastener consists of two pre-assembled half shells and is attached using a screw-clamp connection front side of the mk 2279/2280 profiles.

Material: die-cast aluminium

Fastening example

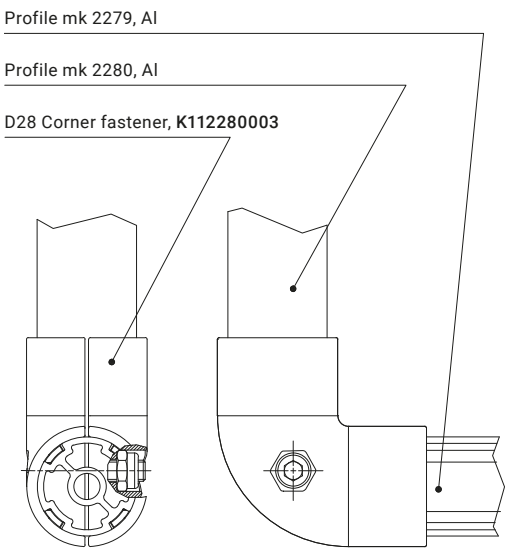

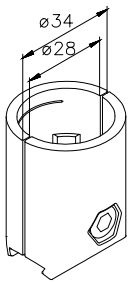

D28 T-connector
K112280001

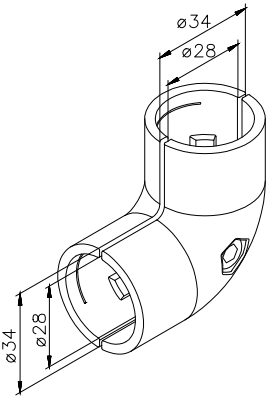

D28 Corner fastener
K112280003

D28 Cross Connector

The D28 X cross connector provides a stable connection between two mk 2279 round tube profiles. The connector is attached to the longitudinal keys of the profiles using a screw-clamp connection at a 90° angle.

Material: die-cast aluminium

Fastening example

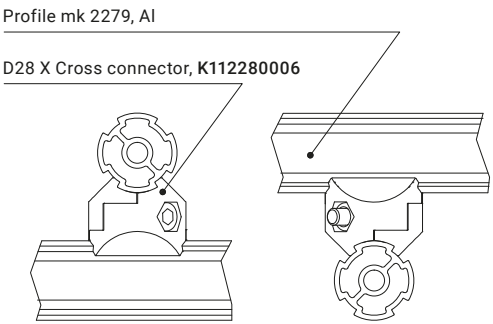

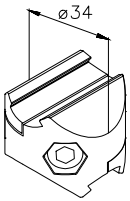

D28 X Cross connector
K112280006

Series D28 Connectors

D28 Angle Fasteners

The D28 45° connector consists of two pre-assembled half shells and is attached using a screw-clamp connection on the longitudinal key of the mk 2279 profile and face of the mk 2279/2280 profiles.

The D28 angle brace stabilises the corner joints of the mk 2279 profile. The connector also consists of two pre-assembled half shells and is attached using a screw-clamp connection on the longitudinal keys of the profiles. Series 40 corner joints can also be stabilised using the adapter D28/40.

Material: die-cast aluminium

Fastening example

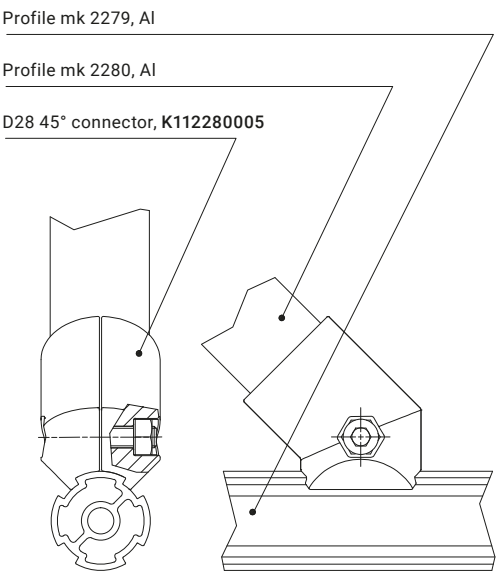

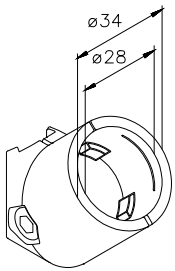

D28 45° connector
K112280005

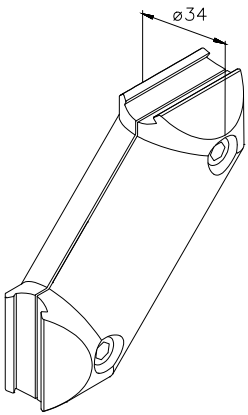

D28 Angle brace
K112280009

D28 Ball Joint Connectors

The ball joint connectors are suitable for variable connections between two Series D28 round tube profiles. Each consists of two pre-assembled half shells. Angles up to 90° can be fixed by tightening the screws.

D28 Ball joint 1 is attached using a screw-clamp connection front side of the profiles. D28 Ball joint 2 consists of two pre-assembled half shells and is attached using a screw-clamp connection on the longitudinal key of the mk 2279 profile and face of the mk 2279/2280 profiles.

Material: die-cast aluminium

Fastening example

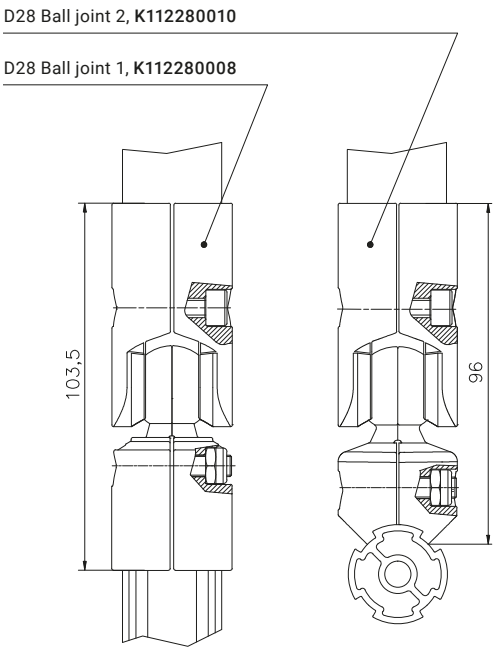

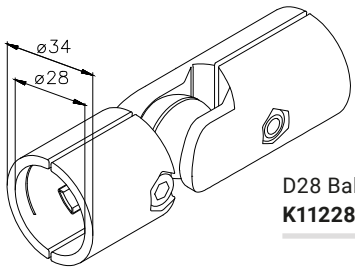

D28 Ball joint 1
K112280008

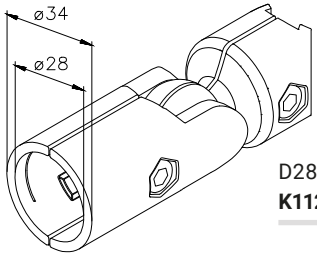

D28 Ball joint 2
K112280010

Series D28 Connectors

D28 Parallel Connectors

The parallel connector shown here provides a stable connection between two Series D28 round tube profiles that run parallel to each other. They consist of two pre-assembled half shells.

D28 parallel connector 1 is attached using a screw-clamp connection on the longitudinal key of the mk 2279 profile. D28 parallel connector 2 is attached using a screw-clamp connection on the longitudinal key of the mk 2279 profile and around the mk 2280 profile.

Material: die-cast aluminium

Fastening example

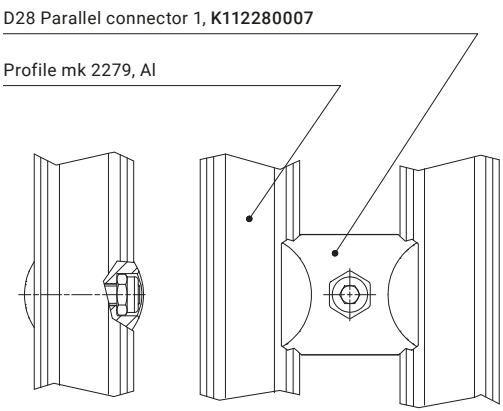

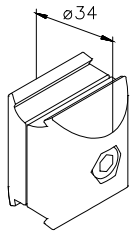

D28 Parallel connector 1
K112280007

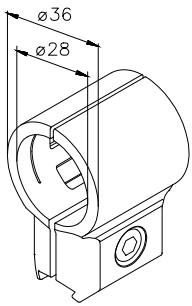

D28 Parallel connector 2
K112280011

D28 Adapter for Series 40 Profiles

The D28/40 adapter enables a Series 40 profile to be used with Series D28 connectors. The adapter plate is fixed in the slot or attached to the face of a Series 40 profile, which allows a Series 28 screw-clamp connection to be attached.

Material: die-cast aluminium

Fastening example

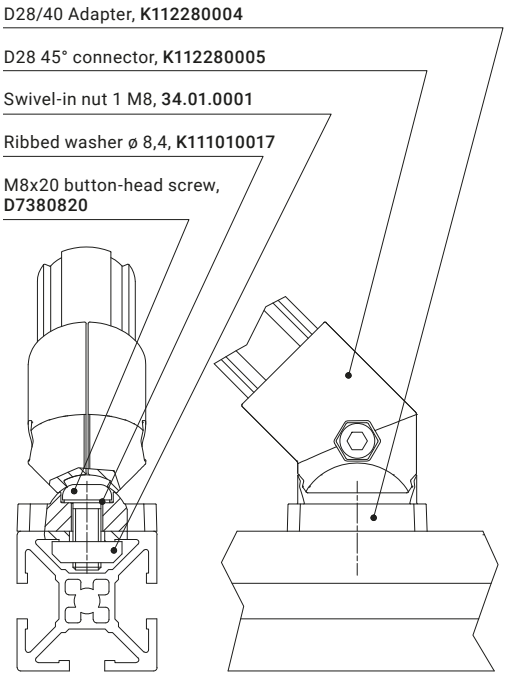

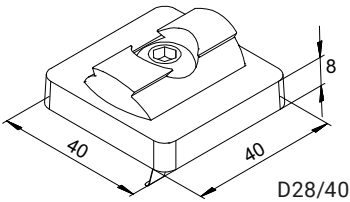

D28/40 Adapter
B46.08.028

Set with
fastening accessories

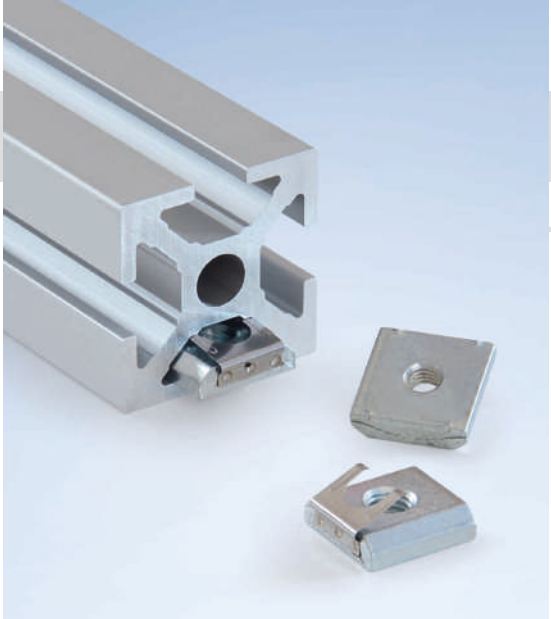

Nuts/T-nuts

Nuts

Nuts are mk's preferred mounting element for use with angles, plates and accessory components on the slot side. They can withstand heavy loads and are resistant to extraction. The version with an additional spring sheet lets you fix the nuts in the profile slot so they can no longer move. This makes it significantly easier to install angles and accessory components in vertical slots. The ESD version also ensures that the connection is conductive.

Material: Galvanised steel

For tightening torques, see page 75

25 40 50 60

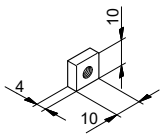

Nut 1
(Series 25)

M4	**25.50.0540**
M5	**25.50.0500**
M6	**25.50.0512**

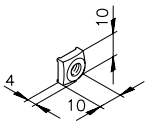

Nut 1 ESD
(Series 25)

M5	**25.50.0508**
M6	**25.50.0518**

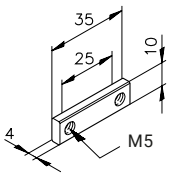

Nut 2/25
(Series 25)

M5	**25.50.0504**
M6	**25.50.0513**

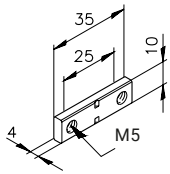

Nut 2/25 ESD
(Series 25)

M5	**25.50.0505**

25 40 50 60

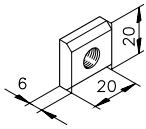

Nut 1

M4	**34.08.0001**
M5	**34.12.0001**
M6	**34.02.0008**
M8	**34.01.0001**

Nut 1 ESD

M4	**34.08.0018**
M6	**34.02.0018**
M8	**34.01.0018**

Nut 1 VA

M4	**34.08.0004**
M5	**34.12.0004**
M6	**34.02.0012**
M8	**34.01.0024**

Stainless steel

Nut 1 ESD VA

M5	**34.12.0018**

Stainless steel

25 | 40 | 50 | 60

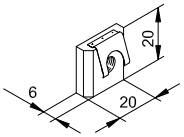

Nut 1
with spring sheet

M6	**34.02.0051**
M8	**34.01.0051**

Nut 1 ESD
with spring sheet

M6	**34.02.0050**
M8	**34.01.0050**

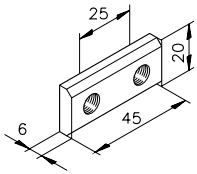

Nut 2/25

M6	**34.02.0010**
M8	**34.01.0002**

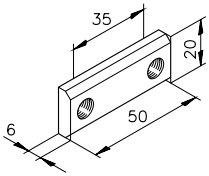

Nut 2/35

M8	**34.01.0011**

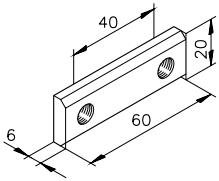

Nut 2/40

M8	**34.01.0019**

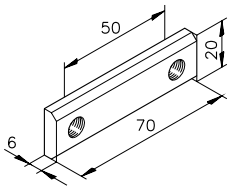

Nut 2/50

M8	**34.01.0003**

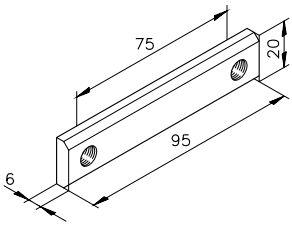

Nut 2/75

M8	**34.01.0005**

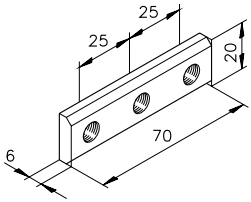

Nut 3/25

M8	**34.01.0004**

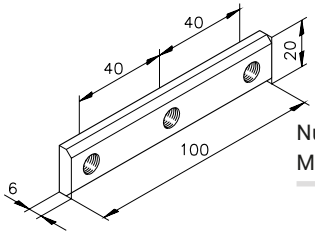

Nut 3/40

M8	**34.01.0022**

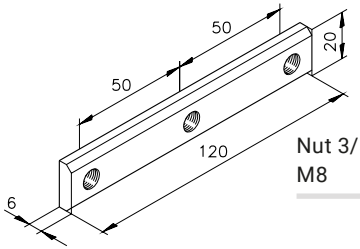

Nut 3/50

M8	**34.01.0006**

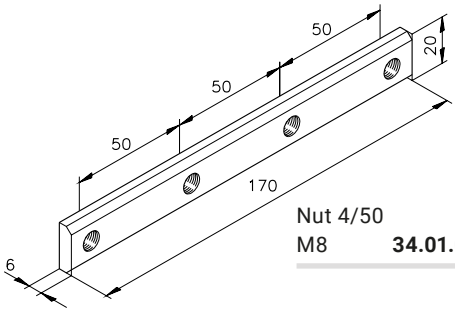

Nut 4/50

M8	**34.01.0007**

3

Nuts

Material: Galvanised steel

25 40 50 **60**

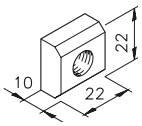

Nut 1
(Series 60)

M8	**34.60.0101**
M10	**34.60.0201**
M12	**34.60.0301**

Nut 1 VA
(Series 60)

M12	**34.60.0321**

Stainless steel

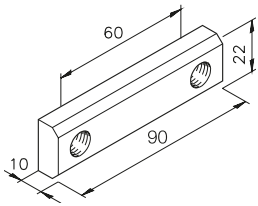

Nut 2/60

M10	**34.60.0203**
M12	**34.60.0303**

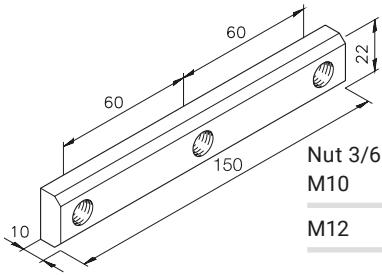

Nut 3/60

M10	**34.60.0205**
M12	**34.60.0305**

Countersunk Nuts

Material: Galvanised steel

25 **40** 50 60

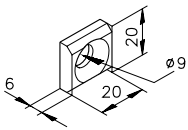

Countersunk
Nut S1
34.09.0001

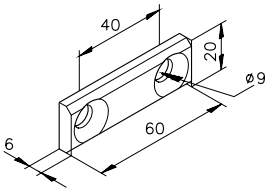

Countersunk
Nut S2/40
34.09.0007

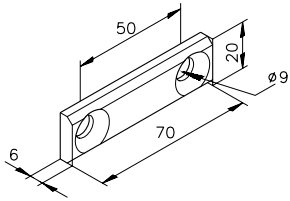

Countersunk
Nut S2/50
34.09.0002

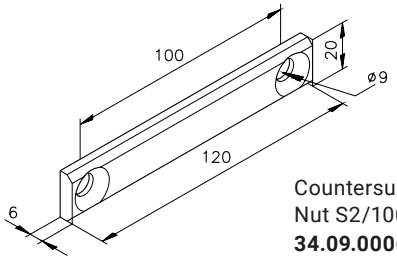

Countersunk
Nut S2/100
34.09.0006

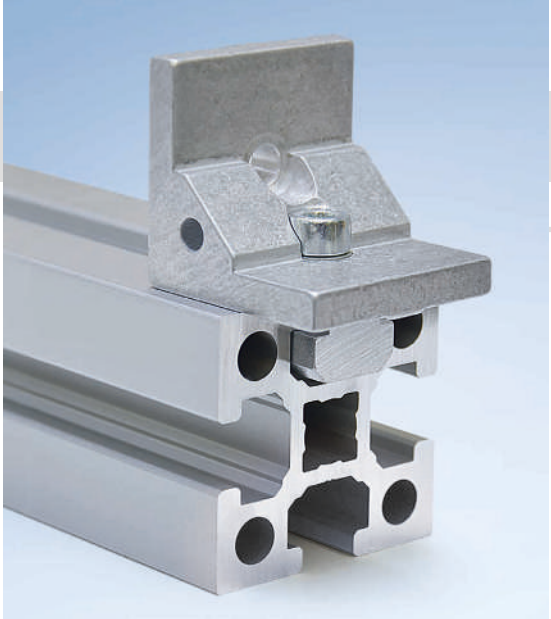

T-slot Nuts

T-slot nut 1 allows you to connect Series 40/50 angles with a key to profiles from Series 60. Its geometry results in a precisely aligned connection that resists twisting in the Series 60 14 mm slot; see also the fastening example.

Material: Tumbled aluminium

3

25 40 50 **60**

Fastening example

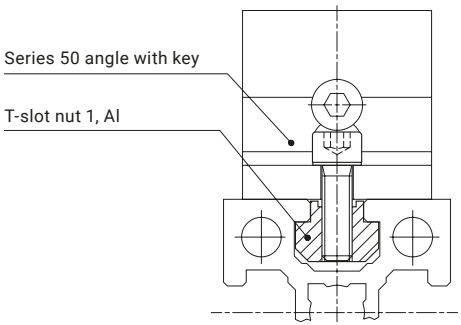

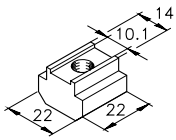

T-slot nut 1	
M6	**34.60.2001**
M8	**34.60.2101**

Nuts/T-nuts

Nuts for Later Mounting

Nuts for later mounting can be installed in the profile slot even if the profile's face is already sealed. In addition, they can be used for profiles with closed slots that are only open where the connection is located.

Material: Galvanised steel

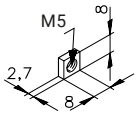

25 40 50 60

Square nut

M5	**D05625**

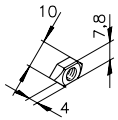

25 40 50 60

Swivel-in nut 1
(Series 25)

M4	**25.50.0541**
M5	**25.50.0501**

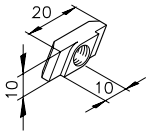

25 40 50 60

T-nut 1

M4	**34.07.0004**
M5	**34.07.0003**
M6	**34.07.0002**
M8	**34.06.0002**

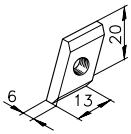

25 40 50 60

Slot nut 1

M5	**34.04.0002**
M6	**34.04.0001**
M8	**34.03.0001**

Slot nut 1

M6	**34.04.0003**
M8	**34.03.0002**

Stainless steel

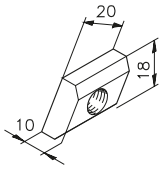

25 40 50 60

Slot nut 1

M8	**34.60.1101**
M10	**34.60.1201**
M12	**34.60.1301**

Clip

The insulating plastic clip serves to attach light, small parts such as nameplates, signs, holders for cable ties, etc.

Material: Plastic,
galvanised steel threaded insert

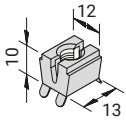

25 40 50 60

Clip (series 40)

M4	**K111020006**
M5	**K111020007**
M6	**K111020008**

25 40 50 60

Clip (series 50)

M4	**34.14.0006**
M5	**34.14.0007**
M6	**34.14.0008**

Nuts for Later Mounting

Swivel-in nuts with a spring sheet can be installed in the profile slot even if the profile's face is already sealed. The spring sheet fixes the nut in place, making it much easier to install attachment parts in a vertical position. The ESD function ensures that the connection is conductive.

Attention: Note the maximum key height on the part to be attached; see the fastening example.

Material: Galvanised steel

3

Fastening example

Series 40

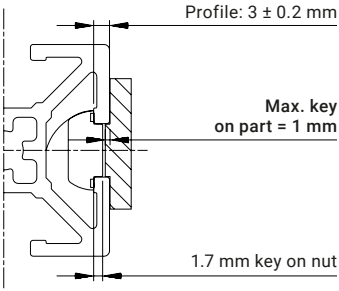

Series 50

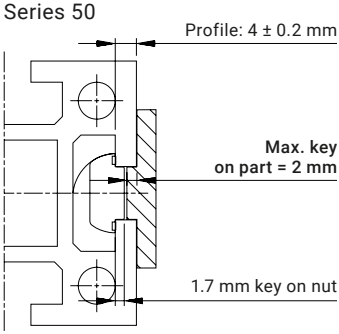

The key height of the attached part, e.g. for an angle, may not exceed 1 mm for Series 40 and 2 mm for Series 50, otherwise there will be no traction between the profile and nut.

25 40 50 60

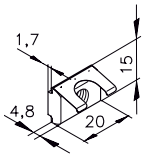

Swivel-in nut 1
ESD with spring sheet

M4	**34.16.0431**
M5	**34.16.0531**
M6	**34.16.0631**
M8	**34.16.0831**

Swivel-in nut 1
ESD with spring sheet

M5	**34.16.0537**
M6	**34.16.0637**
M8	**34.16.0837**

Stainless steel

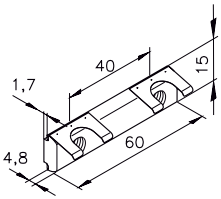

Swivel-in nut 2/40
ESD with spring sheet

M8	**34.16.0834**

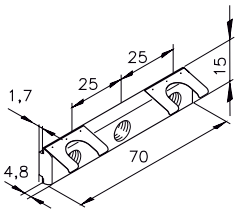

Swivel-in nut 3/25
ESD with spring sheet

M8	**34.16.0835**

Nuts/T-nuts

Nut Fixture

... with Retaining Plugs

If nuts with a spring sheet are not available, retaining plugs can also be used to fix standard nuts. This makes mounting attachment parts much easier. The retaining plug is pressed into the nut's thread and then slid into the profile slot from the face. Unlike the nut with spring sheet, this type of attachment can only be used once because tightening the screws displaces the plastic on the retaining plug.

Material: PE plastic

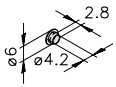

25 40 50 60
Retaining plug, green, M5
mk 2553

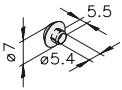

25 40 50 60
Retaining plug, white, M6
mk 2554

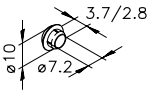

25 40 50 60
Retaining plug, red, M8
mk 2555

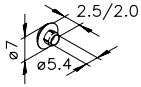

25 40 50 60
Retaining plug, yellow, M6
mk 2556

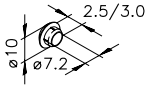

25 40 50 60
Retaining plug, blue, M8
mk 2557

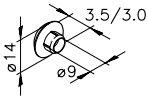

25 40 50 60
Retaining plug, orange, M10
mk 2559

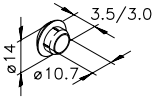

25 40 50 60
Retaining plug, purple, M12
mk 2560

Nut Fixture

... with a Spring Clip

Series 25 nuts also offer the option of fixing them with a spring clip. Together with the nut, the clip is inserted into the profile slot from the face and fixes the nut in the desired position.

Material: Spring steel

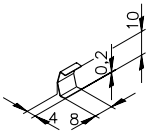

25 40 50 60
Spring clip
for M5/M6 nut
07.13.0003

Cylinder Head Screws

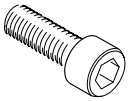

DIN EN ISO 4762
8.8 galvanised steel

M4x10	**D0912410**
M5x8	**D091258**
M5x10	**D0912510**
M5x12	**D0912512**
M5x16	**D0912516**
M6x10	**D0912610**
M6x12	**D0912612**
M6x16	**D0912616**
M6x20	**D0912620**
M8x12	**D0912812**
M8x16	**D0912816**
M8x20	**D0912820**
M8x25	**D0912825**
M8x30	**D0912830**
M8x35	**D0912835**
M8x40	**D0912840**
M12x20	**D09121220**
M12x25	**D09121225**

DIN EN ISO 4762
A2-70 stainless steel

M8x16	**D0912816A2**
M8x20	**D0912820A2**

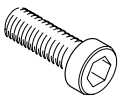

DIN 6912
8.8 galvanised steel

M5x8	**D691258**
M5x10	**D6912510**
M5x12	**D6912512**
M5x20	**D6912520**
M6x16	**D6912616**
M6x20	**D6912620**
M8x16	**D6912816**
M8x20	**D6912820**
M8x25	**D6912825**
M8x30	**D6912830**
M10x25	**D69121025**
M12x30	**D69121230**

DIN 6912
A2-70 stainless steel

M8x16	**D6912816A2**
M8x20	**D6912820A2**

Countersunk Head Screws

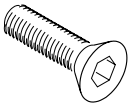

DIN EN ISO 10642
8.8 galvanised steel

M4x6	**D799146**
M4x10	**D7991410**
M4x12	**D7991412**
M4x16	**D7991416**
M5x8	**D799158**
M5x10	**D7991510**
M5x12	**D7991512**
M5x16	**D7991516**
M5x25	**D7991525**
M6x10	**D7991610**
M6x12	**D7991612**
M6x16	**D7991616**
M6x20	**D7991620**
M8x12	**D7991812**
M8x16	**D7991816**
M8x20	**D7991820**
M8x25	**D7991825**
M8x30	**D7991830**

DIN EN ISO 10642
A2-70 stainless steel

M4x10	**D7991410A2**
M4x16	**D7991416A2**
M4x35	**D7991435A2**
M5x8	**D799158A2**
M5x10	**D7991510A2**
M6x12	**D7991612A2**
M6x16	**D7991616A2**
M8x16	**D7991816A2**
M8x20	**D7991820A2**
M8x35	**D7991835A2**

3

Flanged Button-Head Screws

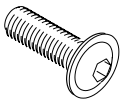

DIN EN ISO 7380-2
10.9 black, galvanised steel

M5x8	**K112010028**
M5x10	**K112010021**
M5x12	**K112010022**
M6x8	**K112010010**
M6x10	**K112010011**
M6x12	**K112010012**
M6x16	**K112010013**
M8x12	**K112010002**
M8x16	**K112010003**
M8x20	**K112010004**

DIN EN ISO 7380-2
A2 stainless steel

M8x12	**K112010102**
M8x16	**K112010103**
M8x20	**K112010104**

Captive,
10.9 black, galvanised steel

M8x16	**71.01.0019**

Captive
A2 stainless steel

M8x16	**71.01.0019A2**

Hexagon Head Screws

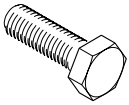

DIN EN ISO 4017
8.8 galvanised steel

M6x8	**D093368**
M6x16	**D0933616**
M6x20	**D0933620**
M6x25	**D0933625**
M6x30	**D0933630**
M6x35	**D0933635**
M8x12	**D0933812**
M8x16	**D0933816**
M8x20	**D0933820**
M8x25	**D0933825**
M8x30	**D0933830**
M8x35	**D0933835**
M8x40	**D0933840**
M10x20	**D09331020**
M10x25	**D09331025**
M10x30	**D09331030**
M12x30	**D09331230**

DIN EN ISO 4017
A2-70 stainless steel

M8x16	**D0933816A2**
M8x20	**D0933820A2**
M8x25	**D0933825A2**

Threaded Insert

Galvanized steel, yellow chromated

M3x6	**K112030002**
M5x10	**K112030005**
M6x12	**K112030006**
M8x15	**K112030008**
M12x22	**K112030010**

Helicoil

A2 stainless steel

M4x0,7x6	**K112030104**
M6x1x9	**K112030106**
M8x1.25x16	**K112030109**
M10x1.5x15	**K112030110**

Threaded Pins

DIN EN ISO 4027
45H galvanized steel

M4x6	**D091446**
M4x8	**D091448**
M4x10	**D0914410**
M5x6	**D091456**
M5x8	**D091458**
M5x10	**D0914510**
M6x6	**D091466**
M6x8	**D091468**
M6x10	**D0914610**
M8x10	**D0914810**
M8x12	**D0914812**
M8x16	**D0914816**
M8x20	**D0914820**

DIN EN ISO 4027
A1 stainless steel

M6x6	**D091466A2**
M6x8	**D091468A2**
M6x10	**D0914610A2**
M8x10	**D0914810A2**
M8x16	**D0914816A2**

Hexagon Nuts

DIN EN ISO 4032
8 galvanised steel

M5	**D09345**
M6	**D09346**
M8	**D09348**
M10	**D093410**
M12	**D093412**

DIN EN ISO 4032
A2-70 stainless steel

M5	**D09345A2**
M6	**D09346A2**
M8	**D09348A2**

Ribbed Washers

Galvanised steel

ø 4.3	**K111010014**
ø 5.3	**K111010015**
ø 6.4	**K111010016**
ø 8.4	**K111010017**
ø 10.5	**K111010018**
ø 13	**K111010019**

Stainless steel

ø 4.3	**K111010020**
ø 5.3	**K111010021**
ø 6.4	**K111010022**
ø 8.4	**K111010023**
ø 10.5	**K111010024**
ø 13	**K111010025**

Galvanised steel

ø 7	**K111010046**

Stainless steel

ø 7	**K111010047**

Tension Washers

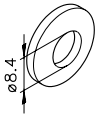

DIN6796-8
Galvanised steel

ø 8.4	**D67968**

DIN6796-8
A2 stainless steel

ø 8.4	**D67968A2**

Wing repair washers

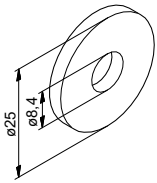

Galvanised steel

ø 8,4	**K111010002**

Section 4 Covers/Wear Strips

4

End Caps 150

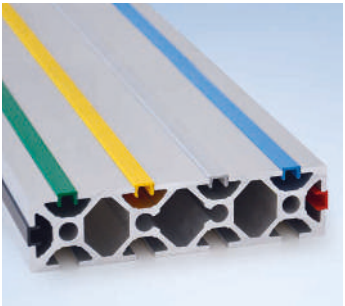

Closure Strips 156

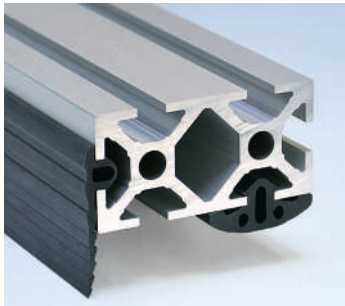

Cover Profiles 157

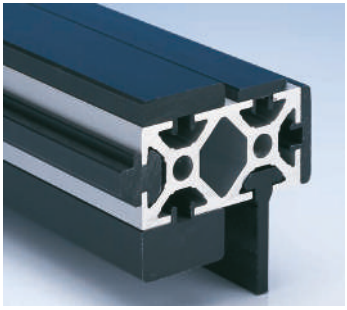

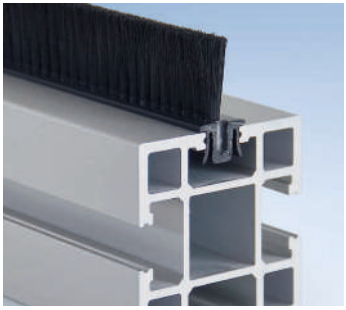

Wear Strips

Wear Strips 158

Wear Strips for Door Stops 160

Wear Strips for Sliding Elements 161

Brush Strips 162

End Caps

End Caps

End caps are made from high-quality plastic provide dependable closure of profile faces. They protect against sharp surfaces and provide for a clean closure and high-quality look. The end caps are fastened to the profile simply by placing them on the end. Some end caps are created using 3D printing. Upon request, additional end caps can also be provided according to individual customer requirements (see 3D printing flyer).

Material: Plastic

25 40 50 60

Dimensional sketch

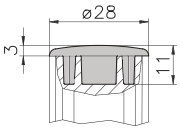

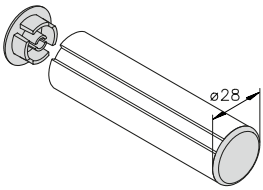

End cap
for the D28 round
tube profile
mk 2582

Black

Dimensional sketch

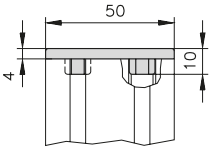

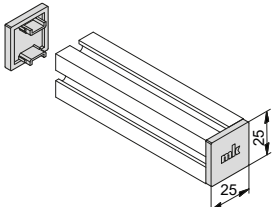

End cap for
mk 2025.01 profile
(25x25)
25.50.8000

Black

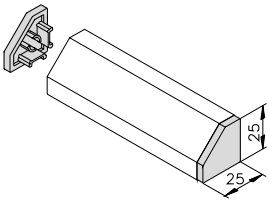

End cap for
mk 2025.38 profile
25.50.8005

Black

End Caps

Material: Plastic

25 40 50 60

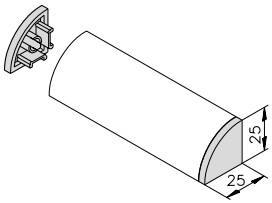

End cap for
mk 2025.37 profile
25.50.8004

Black

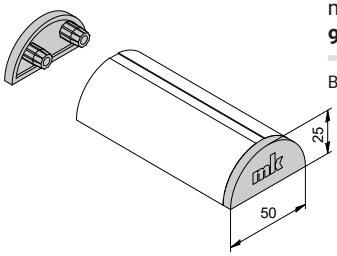

End cap for
mk 2025.39 profile
98.00.0015-G9005

Black

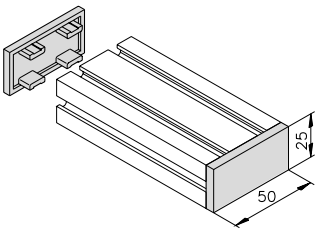

End cap for
mk 2025.02 profile
(25x50)
25.50.8001

Black

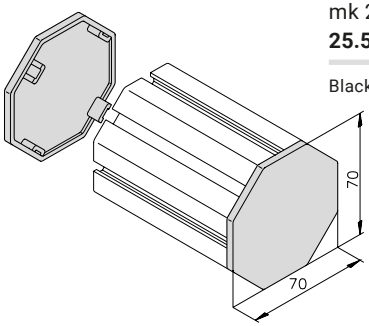

End cap for
mk 2025.21 profile
25.50.8003

Black

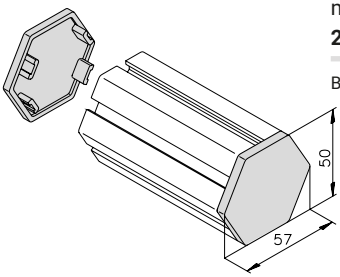

End cap for
mk 2025.20 profile
25.50.8002

Black

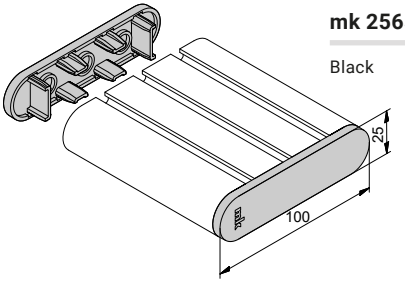

End cap for
mk 2025.22 profile
mk 2565

Black

End Caps

Material: Plastic

25 | 40 | 50 | 60

4

Dimensional sketch

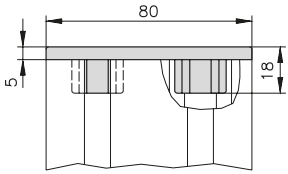

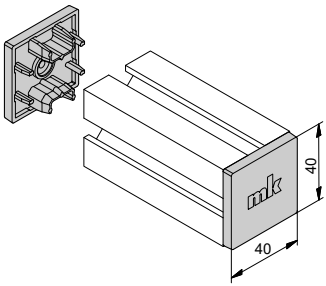

End cap for
40x40 profiles
mk 2507

Black

mk 2507SI*

Silver grey

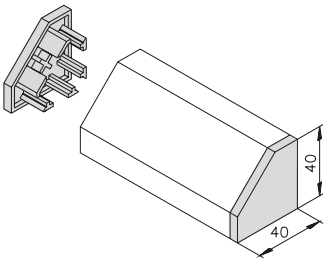

End cap for
mk 2040.14 profile
mk 2523

Black

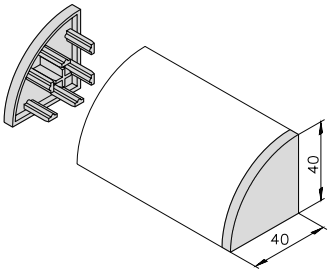

End cap for
mk 2040.15 profile
mk 2524

Black

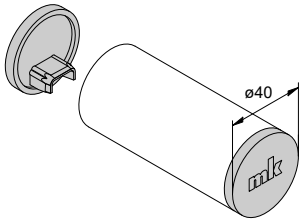

End cap for
mk 2040.16 profile
98.00.0012-G9005

Black

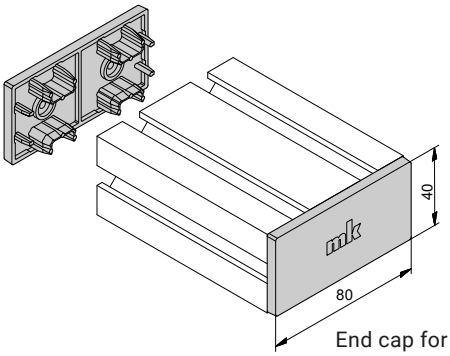

End cap for
40x80 profiles
mk 2508

Black

mk 2508SI*

Silver grey

*Not suitable for cleanroom applications

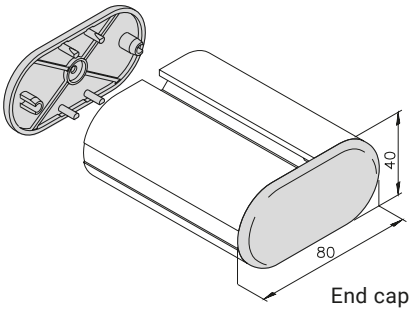

End cap for
mk 2040.23 profile
mk 2529

Black

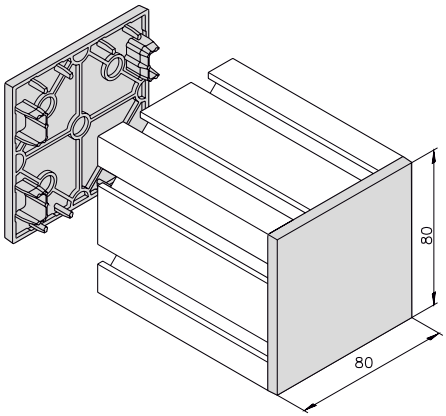

End cap for
80x80 profiles
mk 2502

Black

mk 2502SI*

Silver grey

Dimensional sketch

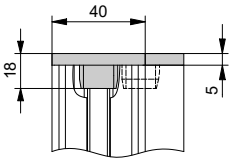

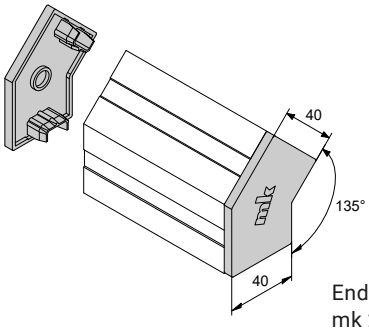

End cap for
mk 2040.19 profile
98.00.0006-G9005

Black

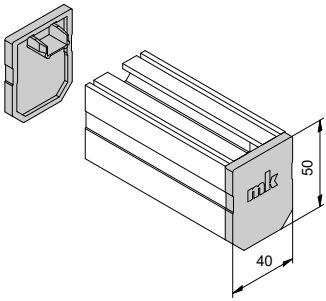

End cap for
mk 2245 profile
98.00.0011-G9005

Black

End Caps

Material: Plastic

25 40 **50** 60

4

Dimensional sketch

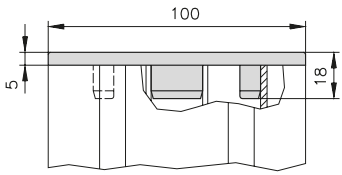

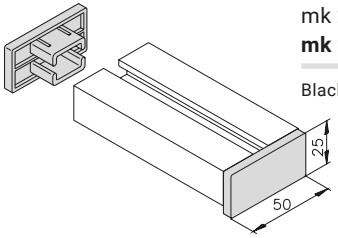

End cap for
mk 2001 profile
mk 2501

Black

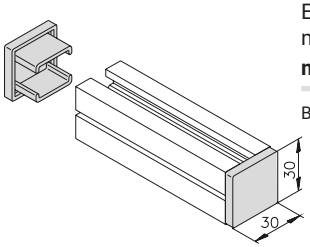

End cap for
mk 2030 profile
mk 2503

Black

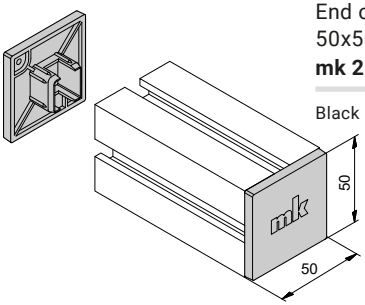

End cap for
50x50 profiles
mk 2500

Black

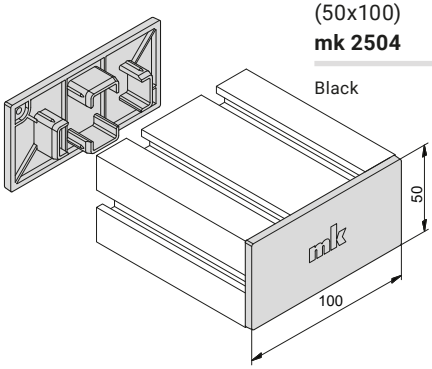

End cap for
mk 2004 profile
(50x100)
mk 2504

Black

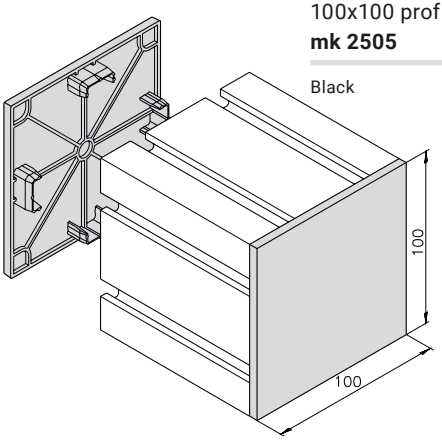

End cap for
100x100 profiles
mk 2505

Black

End Caps

Material: Plastic

25 | 40 | 50 | **60**

Dimensional sketch

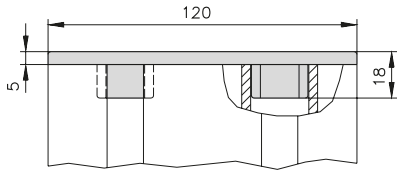

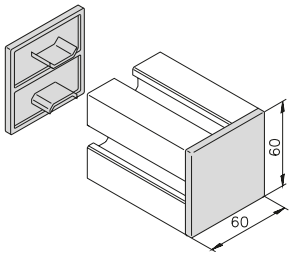

End cap for
mk 2060.01 profile
mk 2561

Black

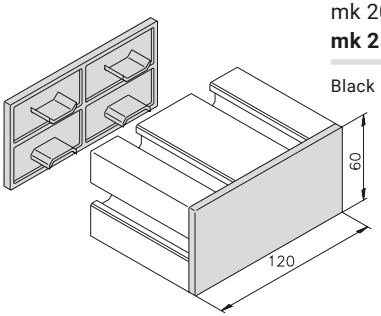

End cap for
mk 2060.02 profile
mk 2562

Black

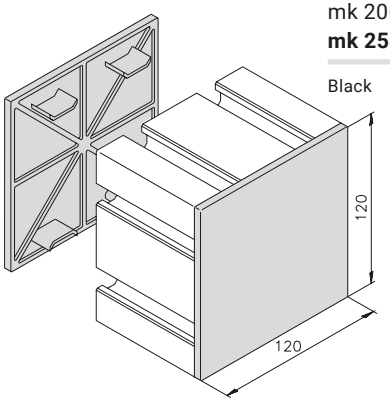

End cap for
mk 2060.05 profile
mk 2563

Black

Note:

For larger profiles, multiple end caps can be used to cover the profile. For the mk 2040.05 profile, for example, you can use mk 2507 and mk 2508 end caps.

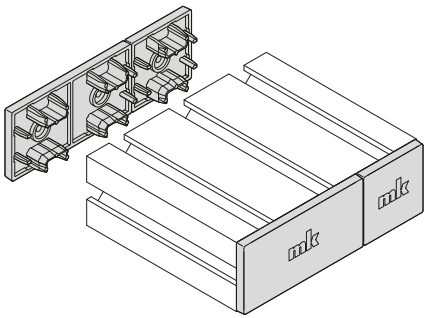

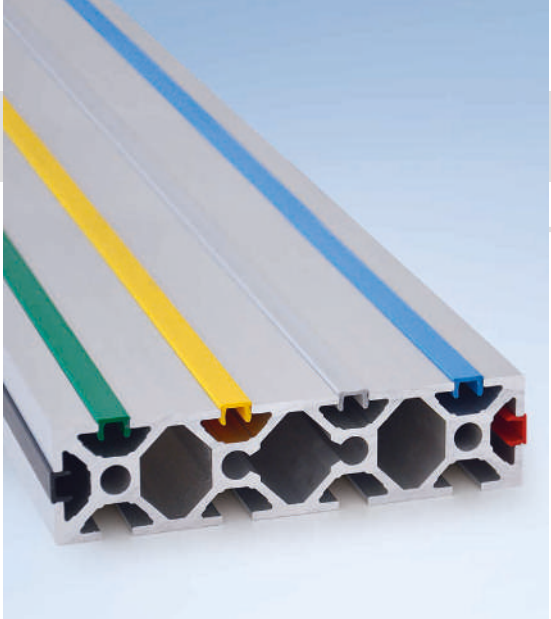

Closure Strips

Closure Strips

Closure strips prevent dirt from getting in the slots and provide for a high-quality look. Multi-coloured versions can be used to provide visual highlights and/or draw attention to the supply lines that might be located beneath it. Aluminium closure strips provide seamless closure of the slot but cannot be removed undamaged once they are hammered in.

Information required for ordering

- Item number
- Length in mm

Fastening example

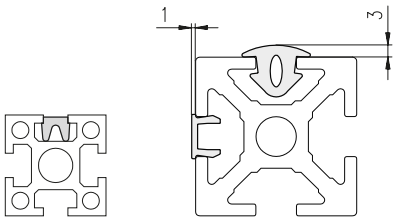

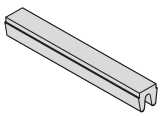

25 40 50 60

Closure strip
mk 3026 black

PVC-P plastic (soft)

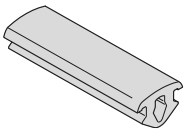

25 40 50 60

Closure strip
mk 3010 black

PVC-P plastic (soft)

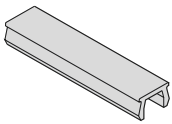

25 40 50 60

Closure strip
mk 3012 black

mk 3013 grey

mk 3014 blue

mk 3015 yellow

mk 3016 green

mk 3017 red

mk 3019* silver grey

PVC-U plastic (hard),
2000 mm stock length

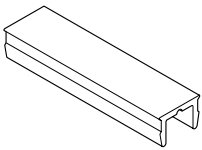

25 40 50 60

Profile mk 2060.30

0.14 kg/m

Stock length	**60.30.2000**
Cut	**60.30. ....**

Anodised aluminium

*Not suitable for cleanroom applications

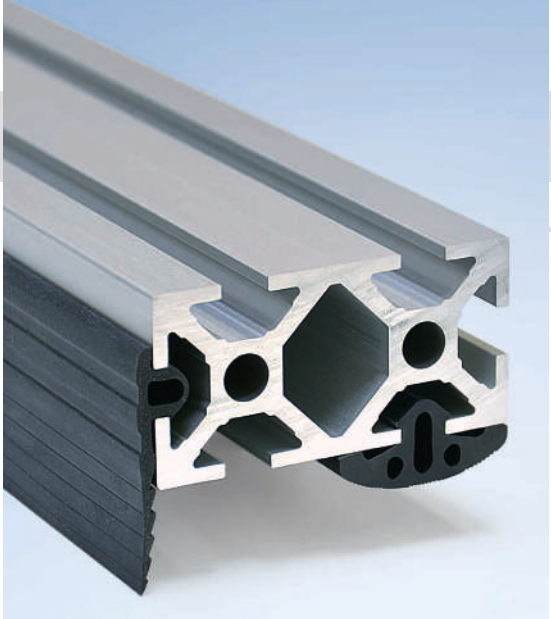

Cover Profiles

The mk 3030 cover profile closes gaps between objects up to 20 mm wide, for example door gaps. The height of the profile can be adapted to the local conditions by simply separating the longitudinal segments. The mk 3025 and mk 3011 cover profiles are used to cover the 5 mm gap between doors/windows and the frame, and they also have a noise-damping and sealing effect. The mk 3032 cover profile is used to close T-slots that are left open when panelling is mounted, to prevent dirt from accumulating. The mk 3035 and mk 3036 cover profiles are used to close T-slots to prevent dirt from accumulating and can also serve as a stop (e.g. for sliding doors) or a non-slip support.

4

Fastening example

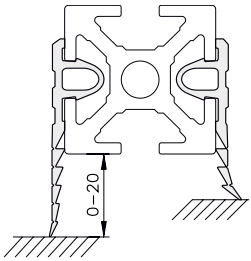

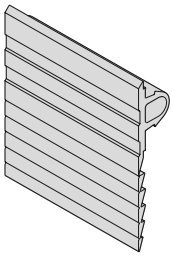

25 40 50 60

Cover profile
mk 3030 black

EPDM rubber

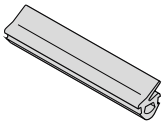

25 40 50 60

Cover profile
mk 3025 black

TPE rubber

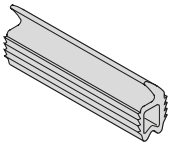

25 40 50 60

Cover profile
mk 3011 black

EPDM rubber

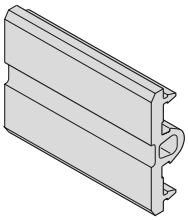

25 40 50 60

Cover profile
mk 3032 black

EPDM rubber,

for profiles to which panelling is attached

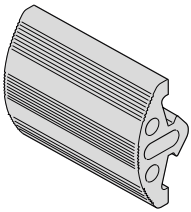

25 40 50 60

Cover profile
mk 3035 black

mk 3036 grey

PVC-P plastic (soft)

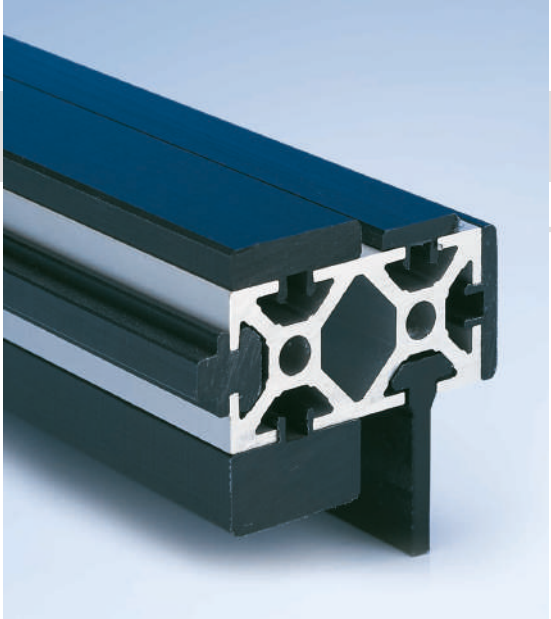

Wear Strips

Wear and guide strips are low-wear plastic strips for various applications, for example transporting goods. They ensure low friction in a wide range of applications and protect the profile surface from abrasion. mk wear strips are available for all profile series in a stock length of 2000 mm. ESD (antistatic) designs and designs for high temperatures up to 60° C are also available on request.

Material: PE-1000 black

Series 25 fastening example

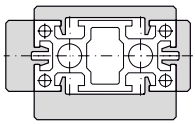

Series 40 fastening example

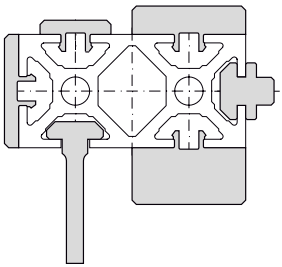

Series 50 fastening example

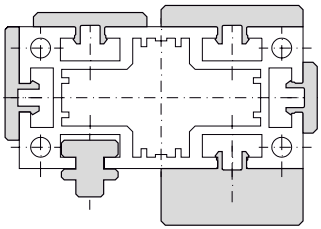

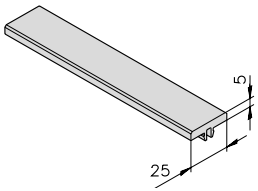

25 40 50 60

Wear strip
mk 1025.71
25.71.2000

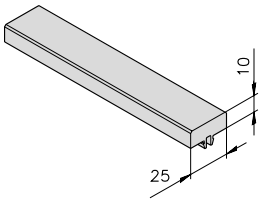

25 40 50 60

Wear strip
mk 1025.72
25.72.2000

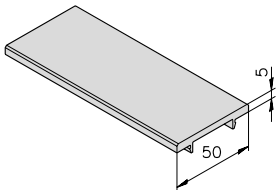

25 40 50 60

Wear strip
mk 1025.73
25.73.2000

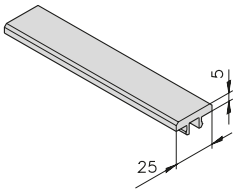

25 40 50 60

Wear strip
mk 1000
22.00.2000

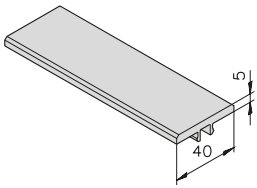

25 40 50 60

Wear strip
mk 1040.01
21.01.2000

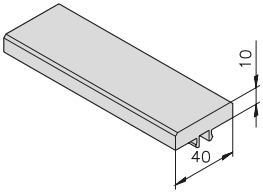

25 **40** 50 60

Wear strip
mk 1040.02
21.02.2000

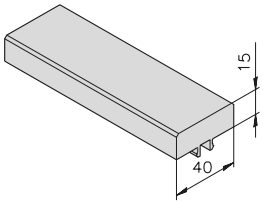

25 **40** 50 60

Wear strip
mk 1040.03
21.03.2000

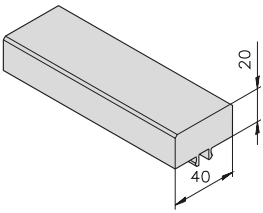

25 **40** 50 60

Wear strip
mk 1040.04
21.04.2000

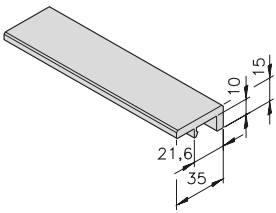

25 **40** 50 60

Wear strip
mk 1040.05
21.05.2000

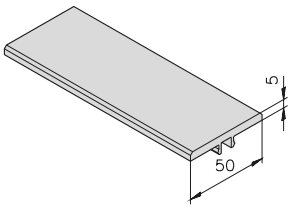

25 40 **50** 60

Wear strip
mk 1001
22.01.2000

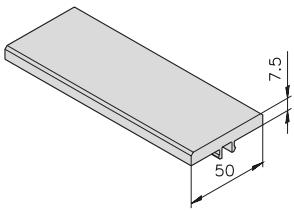

25 40 **50** 60

Wear strip
mk 1017
22.17.2000

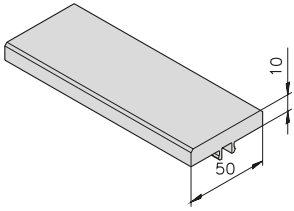

25 40 **50** 60

Wear strip
mk 1070
22.70.2000

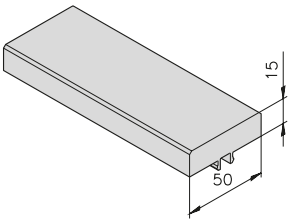

25 40 **50** 60

Wear strip
mk 1071
22.71.2000

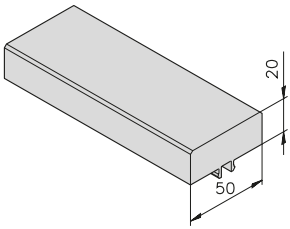

25 40 **50** 60

Wear strip
mk 1072
22.72.2000

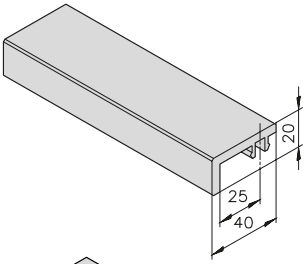

25 40 **50** 60

Wear strip
mk 1008
22.08.2000

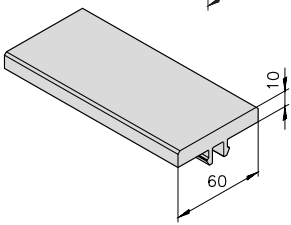

25 40 50 **60**

Wear strip
mk 1060.62
21.62.2000

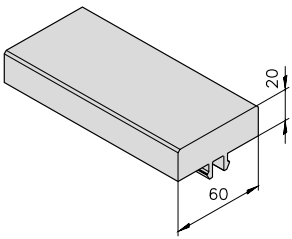

25 40 50 **60**

Wear strip
mk 1060.64
21.64.2000

Wear Strips

Wear Strips for Door Stops

The mk 1090, mk 1091 and mk 1092 wear strips act as a gentle stop for sliding doors and swing doors.

Material: PE-1000 black

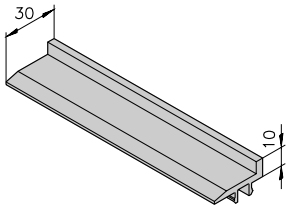

25 | **40** | 50 | 60

Wear strip
mk 1091
22.91.2000

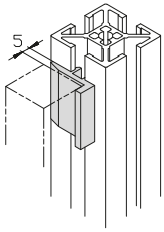

Stop for sheet metal doors
22.91.0035

for 5 mm door gap

Fastening example

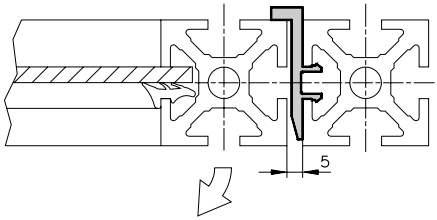

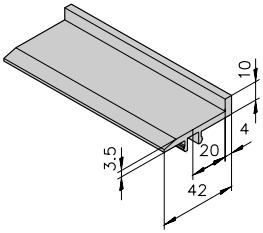

25 | **40** | 50 | 60

Wear strip
mk 1090
22.90.2000

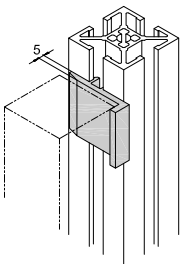

Stop for swing doors
22.90.0035

for 5 mm door gap

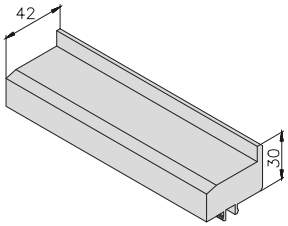

25 | **40** | 50 | 60

Wear strip
mk 1092
22.92.2000

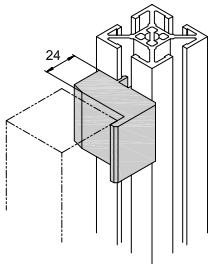

Stop for swing doors
22.92.0035

for 24 mm door gap

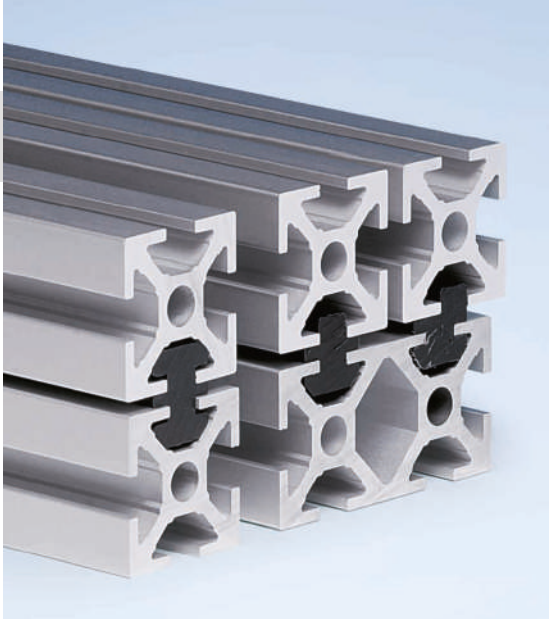

Wear Strips for Sliding Elements

These wear strips fit in the T-slot and serve as low-wear guides for sliding elements such as manual carriages, sliding doors, lifting doors and drawer slides.

Material: PE-1000 black

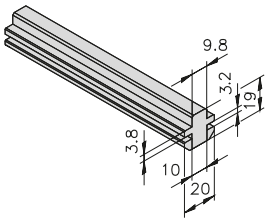

25 | **40** | 50 | 60

Wear strip
mk 1026
22.26.2000

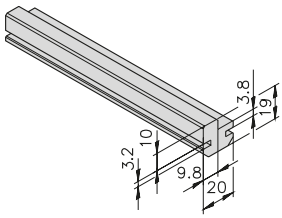

25 | **40** | 50 | 60

Wear strip
mk 1027
22.27.2000

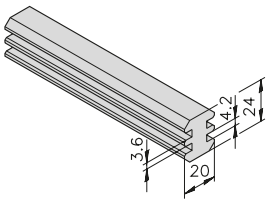

25 | 40 | **50** | 60

Wear strip
mk 1021
22.21.2000

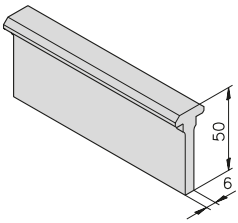

25 | 40 | **50** | 60

Wear strip
mk 1009
22.09.2000

Fastening examples

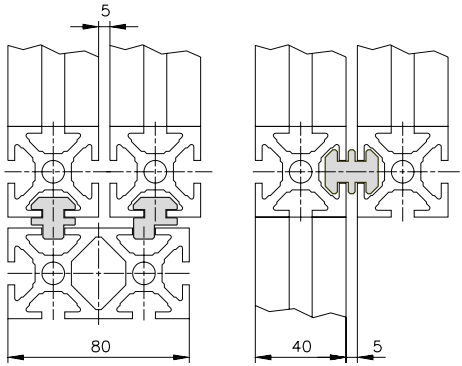

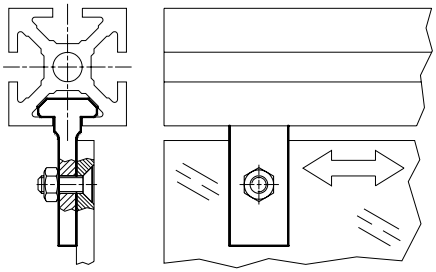

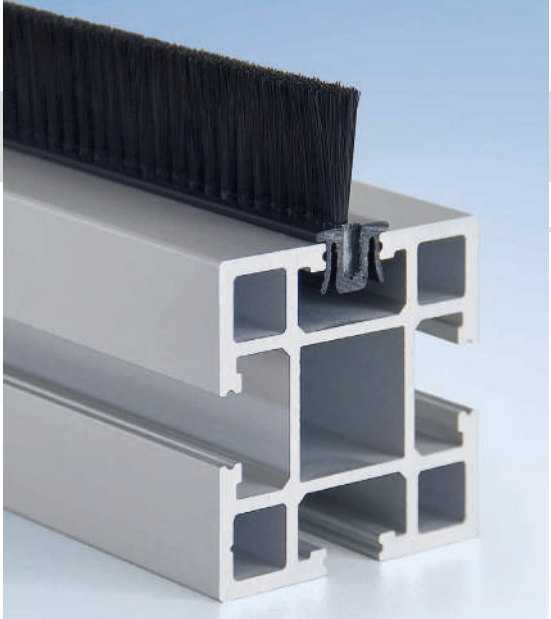

Brush Strips

Brush Strips

Brush strips provide an ideal solution for creating secure seals on machine housings, flaps, apertures or for guiding and carrying processes in conveyor technology. Their flexible fibres allow them to be used to reliably fasten fragile parts in charge carriers and countless other possible solutions. The brush strips can be integrated into new structures simply by sliding them in, or into existing structures by clipping them in once the structure is already built. The brush strips have a stock length of 1000 mm.

Material: PA6 plastic

Fastening example

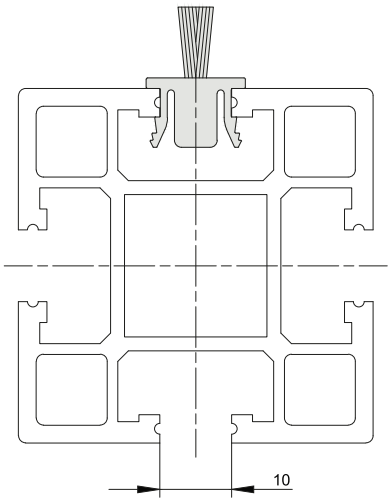

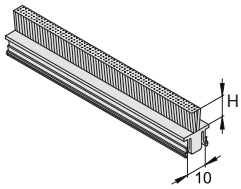

25 40 **50** 60

Brush strip
H = 10 mm
K115030010

H = 15 mm
K115030015

H = 20 mm
K115030020

ø 0.15 mm bristles

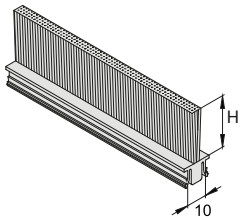

25 40 **50** 60

Brush strip
H = 25 mm
K115030025

H = 30 mm
K115030030

ø 0.2 mm bristles

Note: Brush strips can accumulate static charge.

Notes

Section 5 Floor Elements

5

Levelling Feet

Levelling Feet 166
Levelling Feet with Mounting Bores 170
Stainless Steel Levelling Feets 171

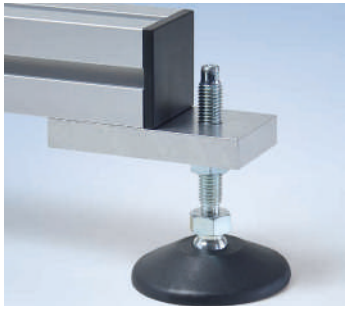

Plates for Levelling Feet

Holders for Levelling Feet 174
Foot Plates 177

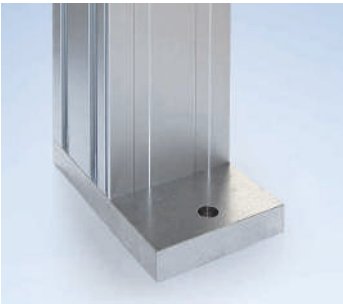

Floor Plates

180

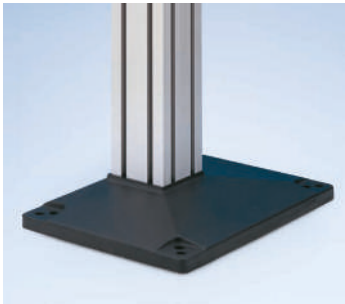

Base Plates

Base Plates 184
Heavy-Duty Base Plates 186

Support Brackets

Support Brackets 188
Retaining Angles 190

Fixed and Swivel Casters

Fixed and Swivel Casters, Type A 192
Fixed and Swivel Casters, Type B 193

Levelling Feet

The M8 and M10 levelling feet are the simplest method of compensating for slightly uneven surfaces. They have an adjustment range of 10 mm. For Series 40 profiles, they are screwed into a threaded insert in the centre of the profile. For Series 50 profiles, e.g. the mk 2000 (50x50), they are threaded into holder 7, which is inserted into the centre of the profile.

Material: Galvanised steel spindle,
PE plastic foot base

Series 40 fastening example

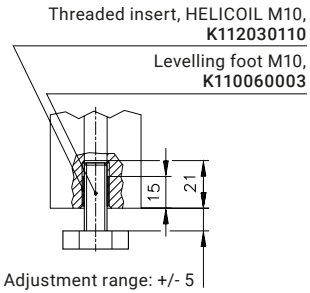

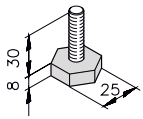

25 | **40** | **50** | 60

Levelling foot M8
K110060004

Levelling foot M10
K110060003

1,000 N load capacity

Series 50 fastening example

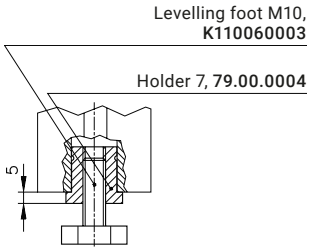

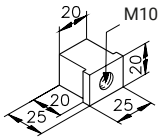

25 | 40 | **50** | 60

Holder 7
79.00.0004

for mk 2000 (50x50) profile
Tumbled aluminium

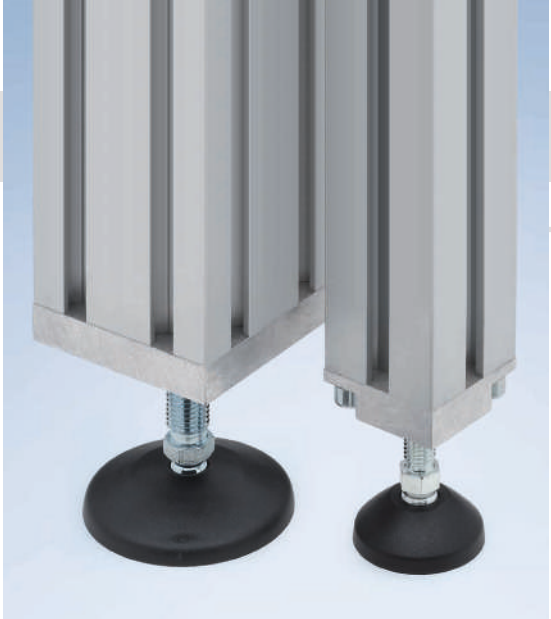

Levelling Feet

Levelling feet serve to stabilize machine frames, belt conveyors, industrial workstations, etc. They are always fastened to the profile using the appropriate plate for levelling feet. All levelling feet have an adjustment range to compensate for height differences. Versions with a ball joint have a swivel range of about ± 20°, allowing them to compensate for slanted surfaces.

25 | 40 | 50 | 60

Material: Galvanised steel spindle,
PA plastic foot base

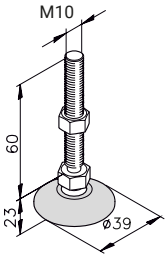

Levelling foot ø 39 M10
B67.02.057

Adjustment range = 40 mm

750 N load capacity
with ball joint

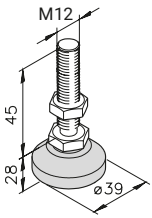

Levelling foot ø 39 M12
B67.02.076

Adjustment range = 20 mm

1,000 N load capacity

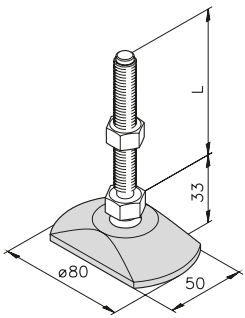

Levelling foot ø 80 M12
B67.02.077

Spindle length L = 50 mm
Adjustment range = 15 mm

Levelling foot ø 80 M12
B67.02.027

Spindle length L = 75 mm
Adjustment range = 40 mm

Levelling foot ø 80 M16
B67.02.028

Spindle length L = 85 mm
Adjustment range = 45 mm

1,000 N load capacity
with ball joint

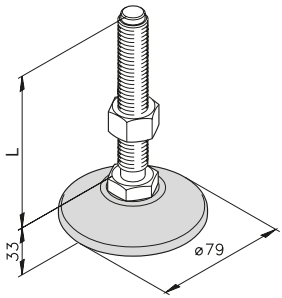

Levelling foot ø 79 M12
B67.02.075

Spindle length L = 50 mm
Adjustment range = 15 mm

Levelling foot ø 79 M12
B67.02.001

Spindle length L = 75 mm
Adjustment range = 40 mm

Levelling foot ø 79 M16
B67.02.002

Spindle length L = 85 mm
Adjustment range = 45 mm

Glass fibre reinforced
foot base,

1,500 N load capacity,
with ball joint

Levelling Feet

The ø76 M16 levelling foot can be anchored to the floor using the floor fastener to prevent it from slipping or lifting off of the floor. With this levelling foot, the spindle is screwed in from underneath.

25 | **40** | **50** | 60

Material: Galvanised steel spindle,
die-cast zinc foot base

floor fastening
26.00.0054

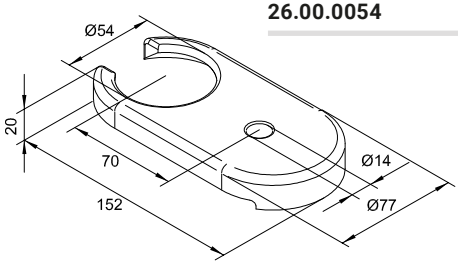

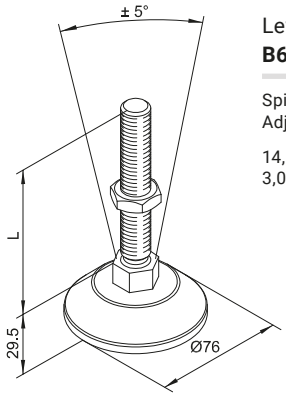

Levelling foot ø 76 M16
B67.02.150

Spindle length L = 100 mm
Adjustment range = 70 mm

14,500 N load capacity
3,000 N tensile strength

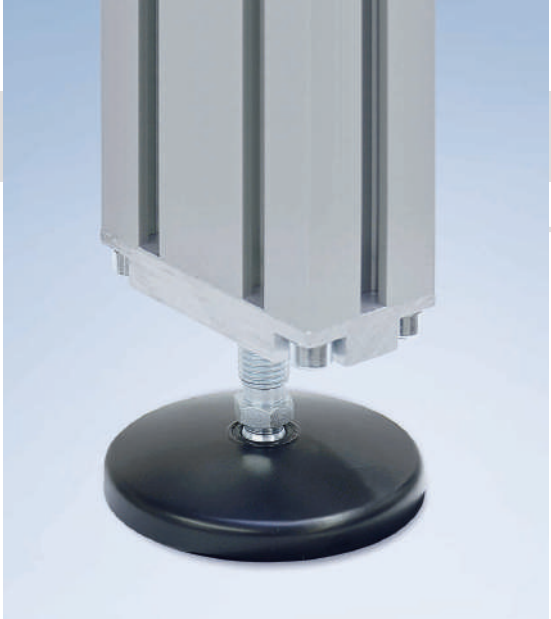

Levelling Feet

... with Ball Joints

Levelling feet with an anti-slip plate prevent the foot from slipping and provide a slight damping effect. The anti-slip plates are made from a thermoplastic elastomer and can be attached or removed later as needed. They are resistant to oil and water up to 60° C.

25 | 40 | 50 | 60

Material: Galvanised steel spindle, die-cast zinc foot base

Levelling foot ø 99 M16
B67.02.141

Spindle length L = 100 mm
Adjustment range = 70 mm
Height F = 29.5 mm

14,500 N load capacity

Levelling foot ø 99 M16 with anti-slip plate
B67.02.142

Spindle length L = 100 mm
Adjustment range = 70 mm
Height F = 29.5 mm

14,500 N load capacity

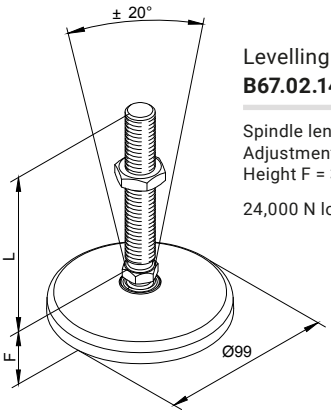

Levelling foot ø 99 M20
B67.02.144

Spindle length L = 125 mm
Adjustment range = 90 mm
Height F = 32.5 mm

24,000 N load capacity

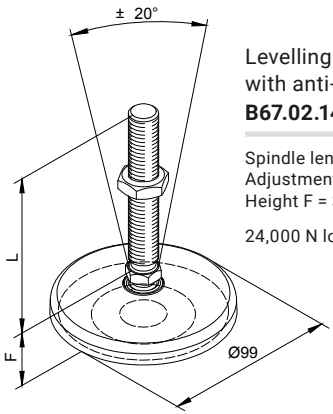

Levelling foot ø 99 M20 with anti-slip plate
B67.02.145

Spindle length L = 125 mm
Adjustment range = 90 mm
Height F = 32.5 mm

24,000 N load capacity

Levelling Feet with Mounting Bores

... with Ball Joints

Levelling feet serve to stabilize machine frames, belt conveyors, industrial workstations, etc. Levelling feet with mounting bores in their foot base can be anchored to the floor. Because of the ball joint, they can withstand a maximum tensile load of 200 N.

25 40 50 60

Material: Galvanised steel spindle, die-cast zinc foot base

Levelling foot ø 99 M16
B67.02.143

with ø 9 mm bore
Spindle length L = 100 mm
Adjustment range = 70 mm
Height F = 29.5 mm

14,500 N load capacity

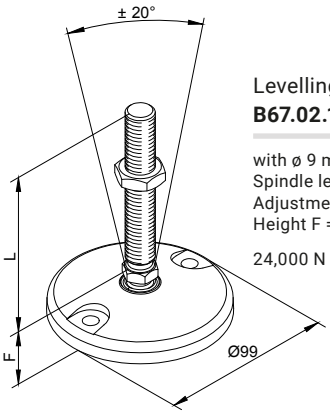

Levelling foot ø 99 M20
B67.02.146

with ø 9 mm bore
Spindle length L = 125 mm
Adjustment range = 90 mm
Height F = 32.5 mm

24,000 N load capacity

Levelling foot ø 119 M20
B67.02.147

with ø 9 mm bore
Spindle length L = 100 mm
Adjustment range = 65 mm

Levelling foot ø 119 M20
B67.02.148

with ø 9 mm bore
Spindle length L = 125 mm
Adjustment range = 90 mm

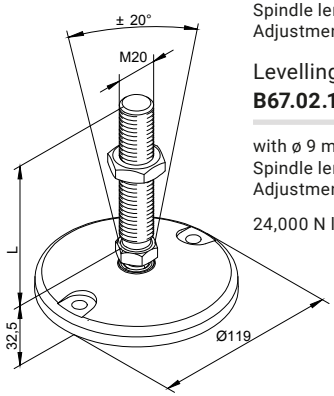

Levelling foot ø 119 M20
B67.02.149

with ø 9 mm bore
Spindle length L = 150 mm
Adjustment range = 115 mm

24,000 N load capacity

Stainless Steel Levelling Feets

... with Ball Joints

With stainless steel levelling feet, either the foot base or the entire levelling foot including the spindle and nut are made from stainless steel, making them ideal for use in cleanrooms and for meeting FDA requirements.

25 40 50 60

Material: Stainless steel foot base, spindle and hexagon nut

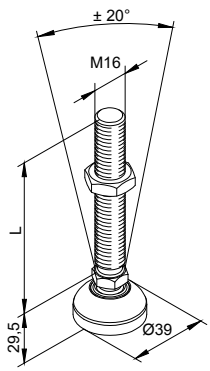

Levelling foot ø 39 M16

B67.02.135

Spindle length L = 100 mm
Adjustment range = 70 mm

B67.02.136

Spindle length L = 200 mm
Adjustment range = 170 mm

14,500 N load capacity

Levelling Feet

Stainless Steel Levelling Feets

The levelling feet shown here are made entirely from stainless steel and are therefore ideal for use in cleanrooms or for meeting FDA requirements in food production applications. The foot's domed shape also ensures that liquids will run off. The height adjustment and swivel range allows the levelling foot to compensate for height differences and uneven surfaces. In addition, they can be anchored to the floor.

25 40 50 60

Material: Stainless steel foot base, spindle and hexagon nut

Levelling foot ø 110 M16

B67.02.080

Spindle length L = 50 mm
Adjustment range = 16 mm

B67.02.081

Spindle length L = 100 mm
Adjustment range = 66 mm

B67.02.082

Spindle length L = 150 mm
Adjustment range = 116 mm

10,000 N load capacity
5,000 N tensile strength

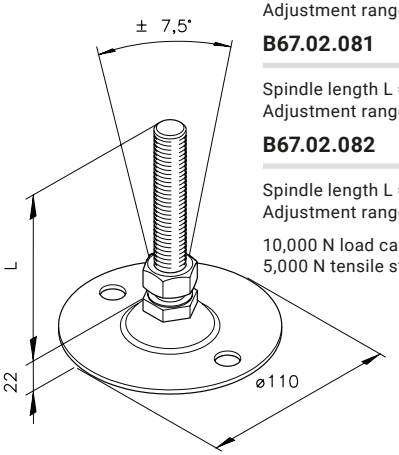

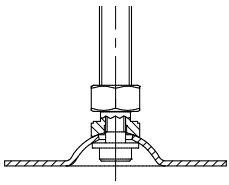

Levelling foot ø 110 M16

B67.02.087

Spindle length L = 90 mm
Adjustment range = 40 mm

10,000 N load capacity
5,000 N tensile strength

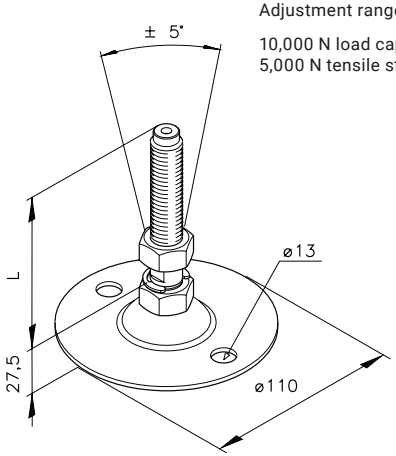

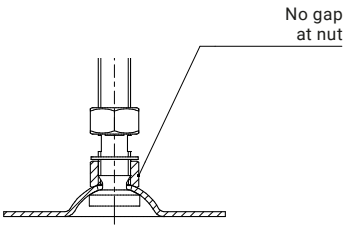

Stainless Steel Levelling Feets

The levelling feet shown here rest atop a vulcanised rubber base that is permanently attached to the stainless steel foot base and that provides anti-slip, damping and sealing effects. The sanitary design has a thread that is completely covered by the adjusting sleeve.

25 40 50 60

Material: Stainless steel foot base, spindle and hexagon nut, NBR plastic damper

Levelling foot ø 80 M16

B67.02.090

Spindle length L = 75 mm
Adjustment range = 45 mm

B67.02.091

Spindle length L = 100 mm
Adjustment range = 70 mm

B67.02.092

Spindle length L = 150 mm
Adjustment range = 120 mm

24,000 N load capacity

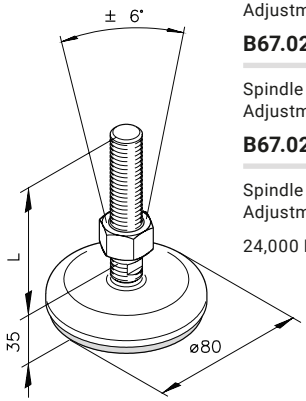

Sanitary design

Levelling foot ø 80 M16

B67.02.097

Spindle length L = 128 mm
Adjustment range = 32 mm

12,000 N load capacity

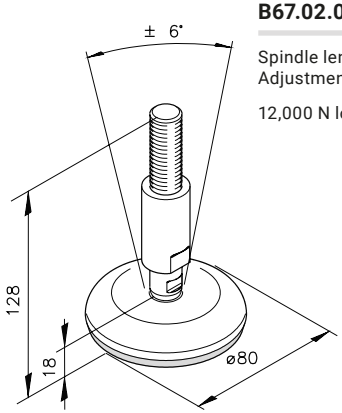

Plates for Levelling Feet

Holders for Levelling Feet

... for Horizontal Profiles

Holders for levelling feet are primarily used for securely attaching levelling feet, but they can also be used for fixed and swivel casters and for lifting devices. Holders are available for all standard profiles and levelling foot threads.

1,000 N load capacity

Material: Tumbled aluminium

Fastening example

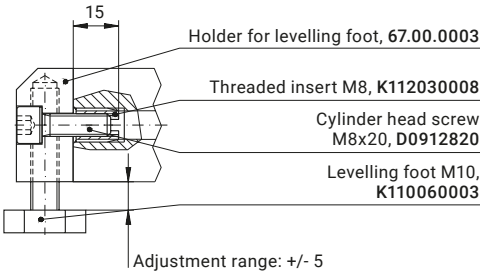

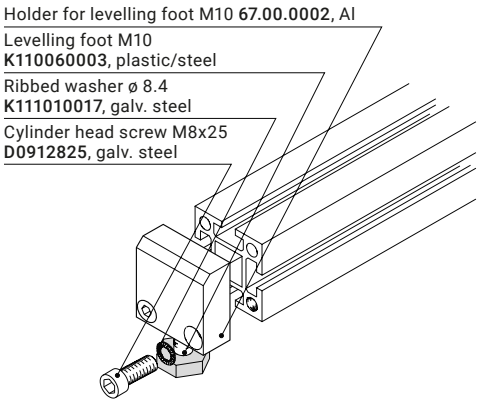

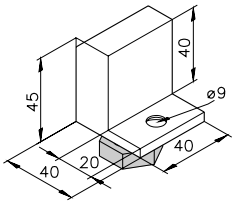

M8x16 DIN 7991

25 **40** 50 60

Holder for levelling foot M10
67.00.0010

without floor levelling screw

for 40 x 40 profile

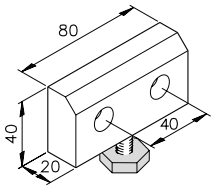

M8x20

25 **40** 50 60

Holder for levelling foot M10
67.00.0003

without floor levelling screw

for 40 x 80 profile

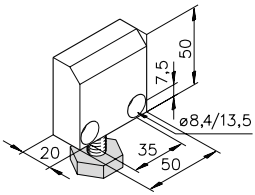

M8x20

25 40 **50** 60

Holder for levelling foot M10
67.00.0002

without floor levelling screw

for mk 2000 (50x50) profile

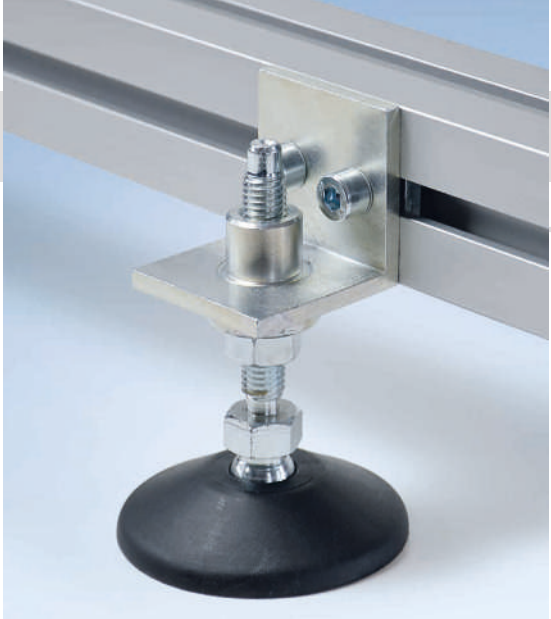

Holders for Levelling Feet

... for Horizontal Profiles

Levelling foot angles act as holders for levelling feet, fixed/swivel casters and lifting devices. They can be attached quickly and without profile machining. They are suitable for retrofitting and provide additional stability.

Material: Galvanised steel

Fastening example

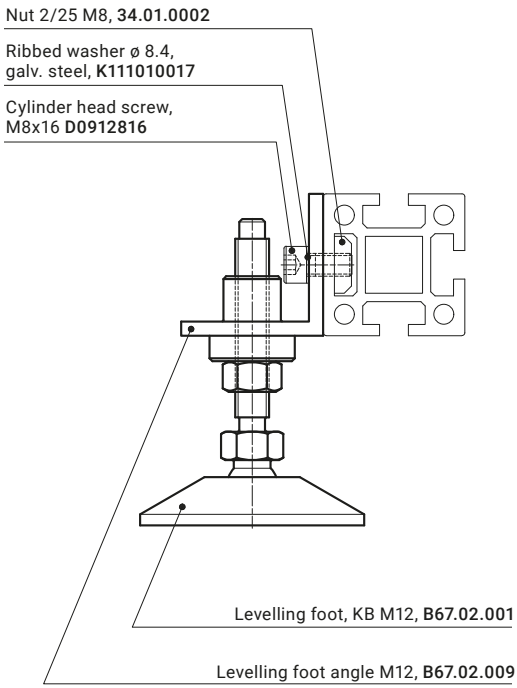

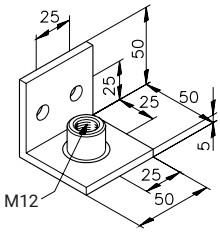

M8x16

25 | 40 | 50 | 60

Levelling foot angle M12
B67.02.009

Levelling foot angle M16
B67.02.010

1,500 N load capacity

Plates for Levelling Feet

Holders for Levelling Feet

... for Horizontal Profiles

The following foot plates act as holders for levelling feet, fixed/swivel casters and lifting devices. They can be attached quickly and without profile services. Foot plate F M16 can also be anchored directly to the floor.

Material: Tumbled aluminium

25 40 **50** 60 M8x16

Fastening example

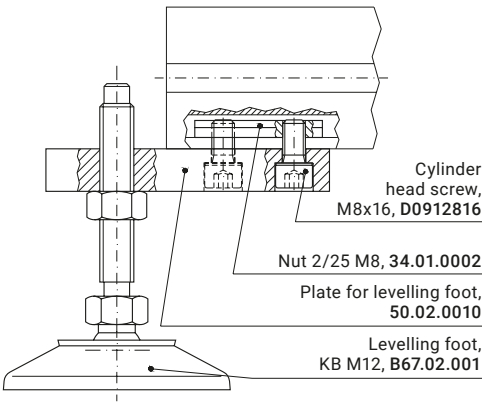

Foot plate D M12
50.02.0010

Foot plate D M16
50.02.0011

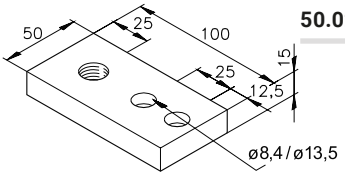

Foot plate F M16
50.02.0018

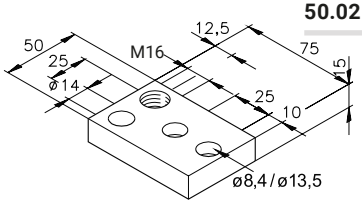

Foot plate G M16
50.02.0007

Foot plate G M20
50.02.0008

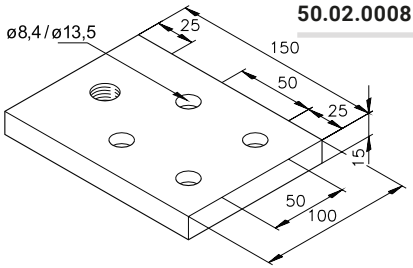

Foot Plates

... for Vertical Profiles

Foot plates act as holders for levelling feet, fixed/swivel casters and lifting devices. They are fastened to the face of a vertical profile.

Material: Tumbled aluminium

25 **40** 50 60 M8x20

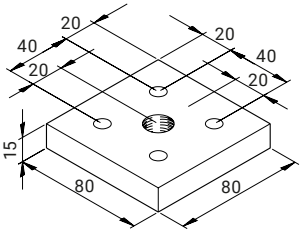

Foot plate J M10
50.02.0042

Foot plate J M12
50.02.0067

Foot plate J M16
50.02.0032

Foot plate J M20
50.02.0050

for mk 2040.03 (80x80), mk 2040.45 (80x80) profile

Fastening example

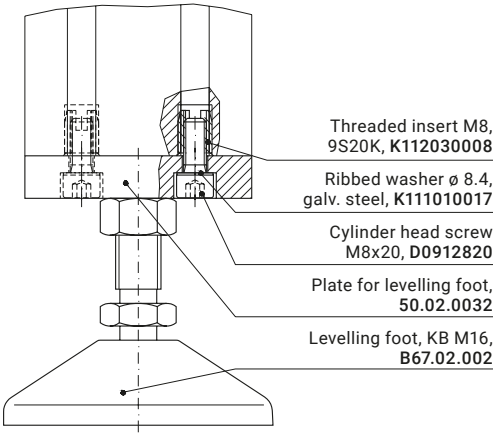

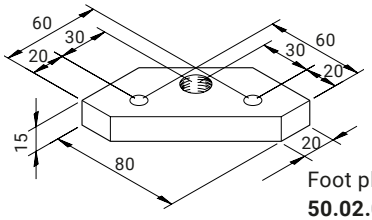

Foot plate K M10
50.02.0043

Foot plate K M16
50.02.0040

for mk 2040.04 profile

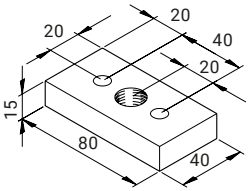

Foot plate I M10
50.02.0041

Foot plate I M12
50.02.0035

Foot plate I M16
50.02.0030

for mk 2040.02 (40x80), mk 2040.41 (40x80), mk 2040.52 (40x80) profiles

6,000 N load capacity

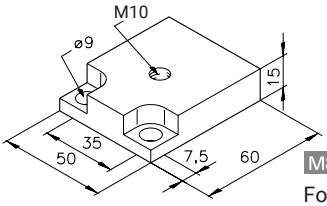

M8x16

Foot plate M10
50.02.0068

for mk 2040.38 profile

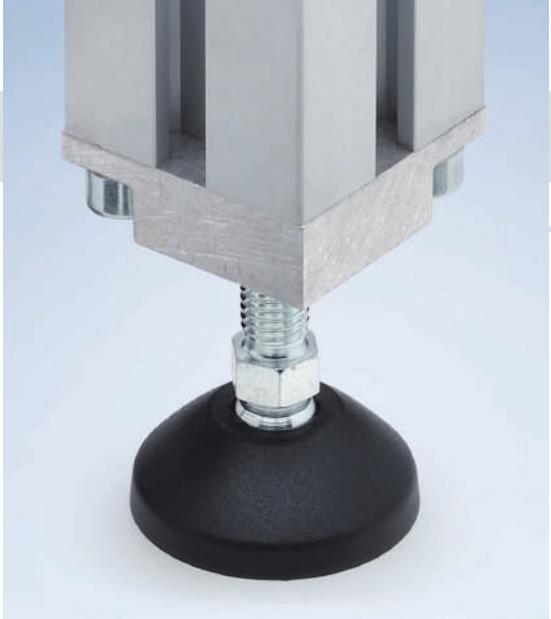

Plates for Levelling Feet

5

Foot Plates

... for Vertical Profiles

Foot plates act as holders for levelling feet, fixed/swivel casters and lifting devices. They are fastened to the face of a vertical profile.

25 40 **50** 60 M8x20

Fastening example

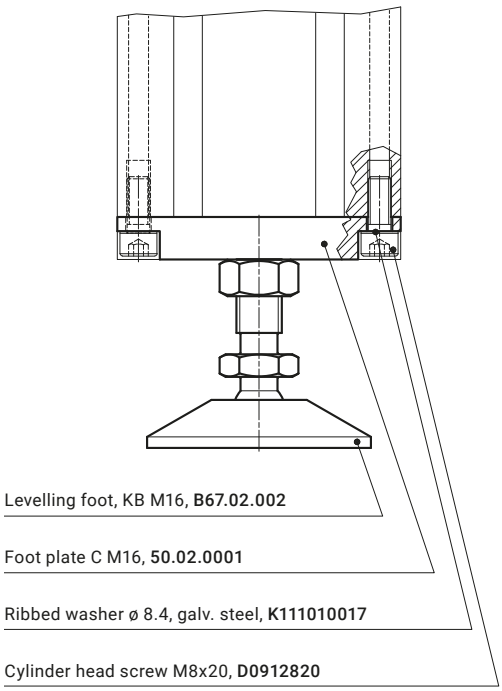

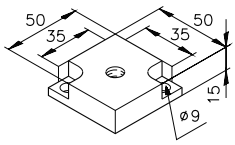

Foot plate A M10
50.09.0013

Foot plate A M12
50.09.0044

Foot plate A M16
50.09.0045

for mk 2000 (50x50) profile
Tumbled aluminium

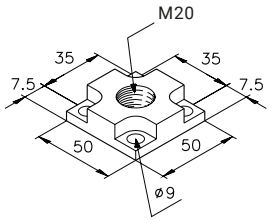

Foot plate 1 M20
50.09.0037

for mk 2000 (50x50) profile
Galvanised steel

25 40 50 60 M8x30

Foot plate B M16
50.02.0003

Foot plate B M20
50.02.0004

Tumbled aluminium

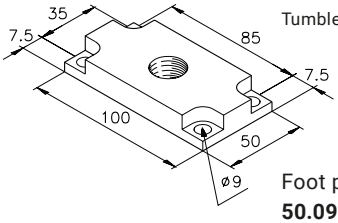

Foot plate 3 M20
50.09.0038

for mk 2004 (50x100) profile
Galvanised steel

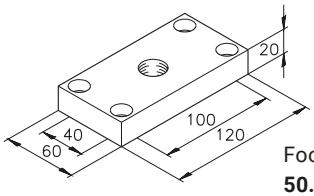

Foot plate 60/4 M16
50.02.6004

Foot plate 60/5 M20
50.02.6005

for mk 2060.02
(60x120) profile
Tumbled aluminium

Foot plate C M16
50.02.0001

Foot plate C M20
50.02.0002

Tumbled aluminium

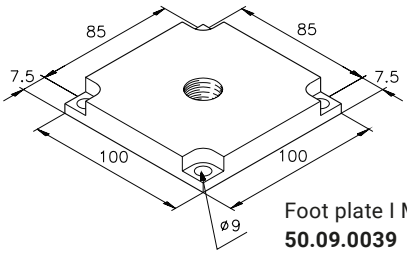

Foot plate I M20
50.09.0039

for mk 2005 (100x100),
mk 2011 (100x100) profile
Galvanised steel

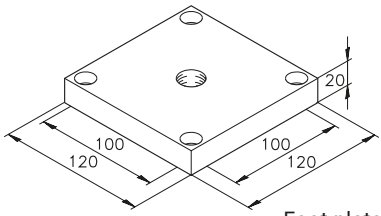

Foot plate 60/8 M16
50.02.6008

Foot plate 60/9 M20
50.02.6009

for mk 2060.05
(120x120) profile
Tumbled aluminium

Floor Plates

Floor plates, whether referred to as base plates or just plates, are used to fasten stands, protective panels, industrial workstations, machine frames, platforms and much more to the floor. They are installed front side of a vertical profile and anchored to the floor with a fastener, for example a segment anchor. They can also be used as flange on other profiles.

Material: Tumbled aluminium

25 | 40 | 50 | 60 M8x20

Fastening example

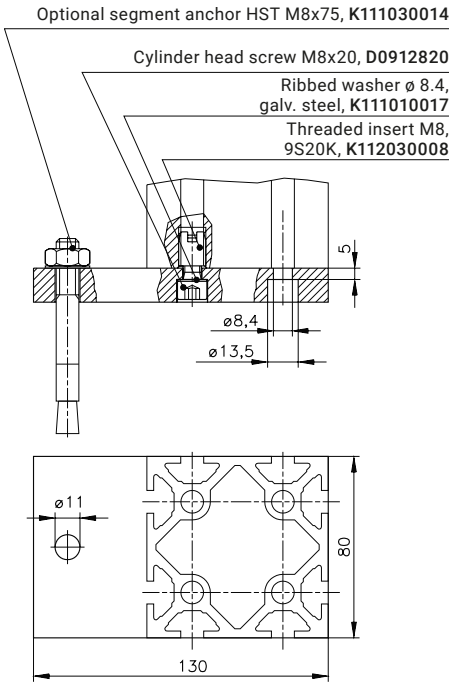

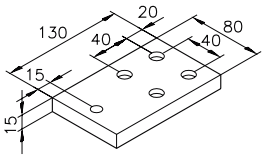

Plate 40/17
50.03.0025

for 80 x 80 profiles

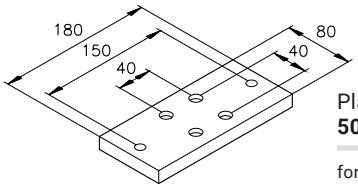

Plate 40/18
50.03.0026

for 80 x 80 profiles

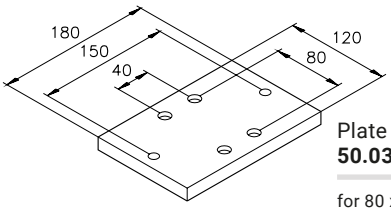

Plate 40/20
50.03.0028

for 80 x 120 profiles

Floor Plates

Material: Tumbled aluminium

25 | 40 | 50 | 60 M8x20

5

Fastening example

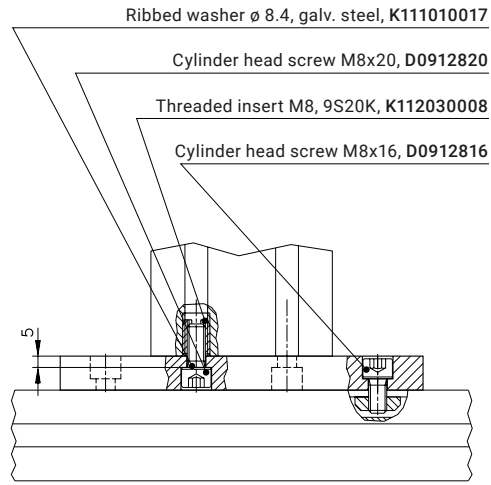

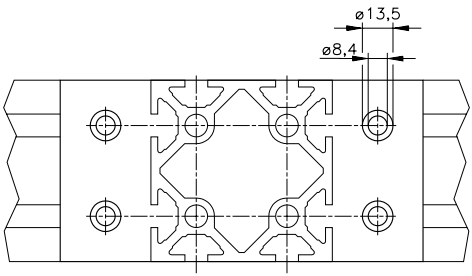

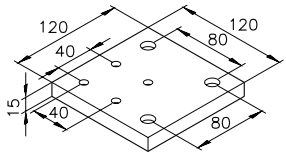

Base plate 40/1
50.03.0009

for 80 x 80 profiles

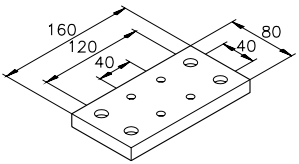

Base plate 40/2
50.03.0010

for 80 x 80 profiles

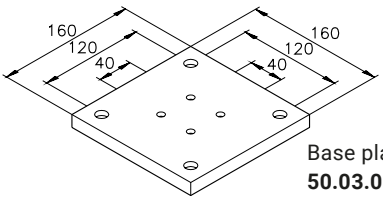

Base plate 40/3
50.03.0011

for 80 x 80 profiles

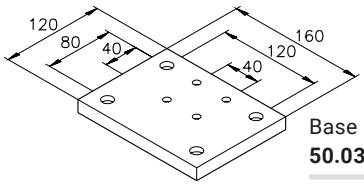

Base plate 40/4
50.03.0012

for 80 x 80 profiles

Floor Plates

Floor Plates

Material: Tumbled aluminium

25 | 40 | 50 | 60 M8x20

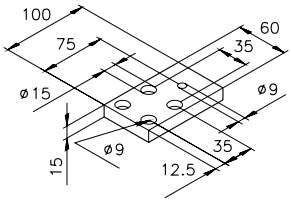

Base plate 1
50.03.0001

for mk 2000 (50x50), mk 2017 (50x50), mk 2018 (50x50) and mk 2019 (50x50) profile

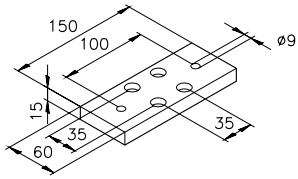

Base plate 2
50.03.0002

for mk 2000 (50x50), mk 2017 (50x50), mk 2018 (50x50) and mk 2019 (50x50) profile

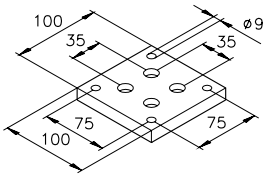

Base plate 4
50.03.0003

for mk 2000 (50x50), mk 2017 (50x50), mk 2018 (50x50) and mk 2019 (50x50) profile

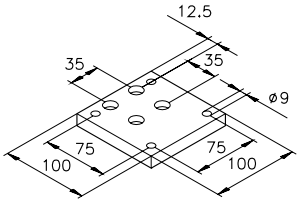

Base plate 4a
50.03.0004

for mk 2000 (50x50), mk 2017 (50x50), mk 2018 (50x50) and mk 2019 (50x50) profile

Fastening example

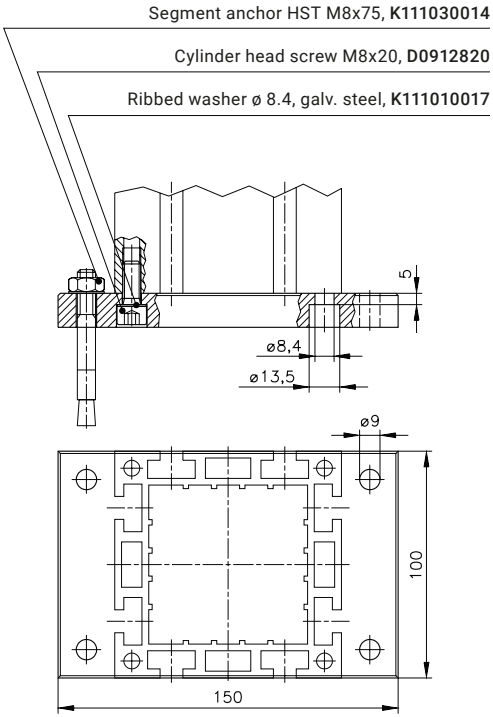

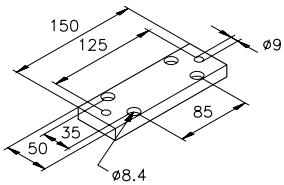

Base plate 5
50.03.0005

for mk 2004 (50x100) profile

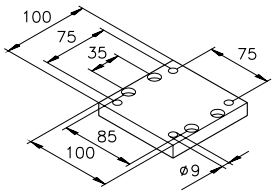

Base plate 6
50.03.0006

for mk 2004 (50x100) profile

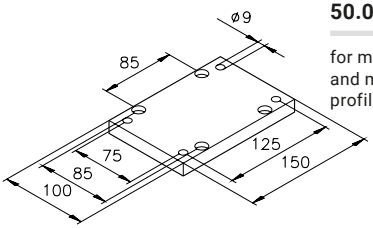

Base plate 7
50.03.0007

for mk 2005 (100x100) and mk 2011 (100x100) profile

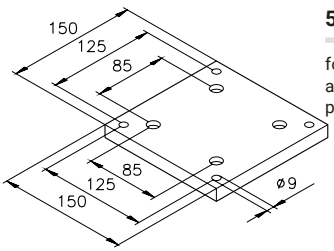

Base plate 8
50.03.0008

for mk 2005 (100x100) and mk 2011 (100x100) profile

Floor Plates

Material: Tumbled aluminium

25 | 40 | 50 | 60 | M8x20

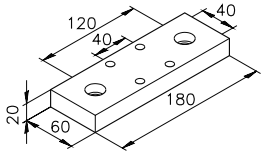

Base plate 60/2
50.03.6002

for mk 2060.01 (60x60) profile

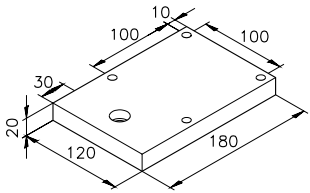

Base plate 60/8
50.03.6008

for mk 2060.05 (120x120) profile

Fastening example

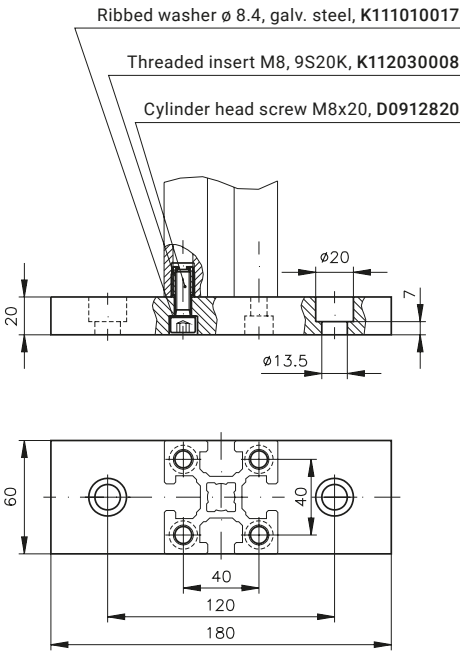

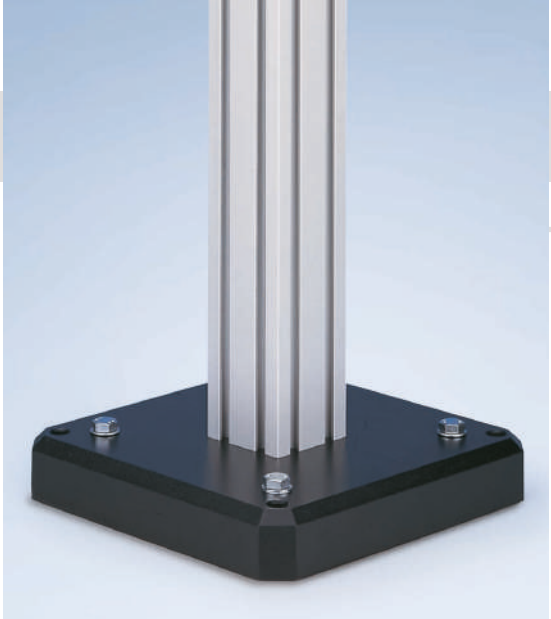

Base Plates

Base plates provide stability for machines, frames, stands, guarding or other equipment. On request, we will be happy to design a base plate for your particular application or manufacture it according to your drawing of the drilling pattern. It is also possible to insert threads or bores into the corners of the base plate.

The assembly kit for each plate (item numbers beginning with B) contains the necessary fastening accessories (segment anchors and adjusting screws).

Material: Grey cast, painted black

25 40 50 60

Fastening example

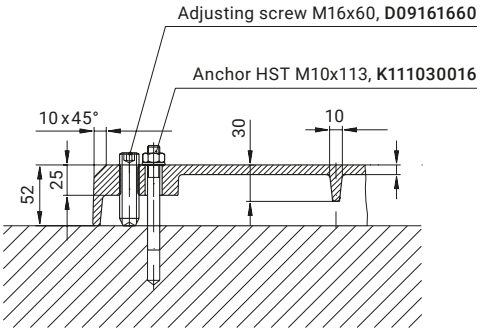

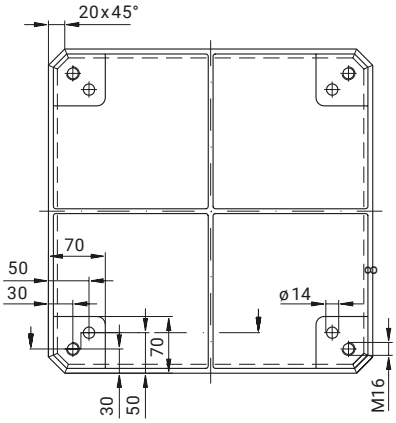

Sample drilling pattern

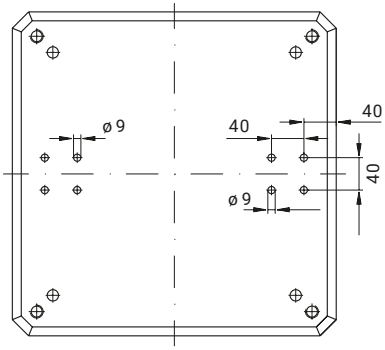

The middle lines indicate the path of the reinforcing bars on the underside of the base plates. Please note the paths of these bars when creating your drawing, as damaging the bars will significantly reduce the load capacity of the base plate.

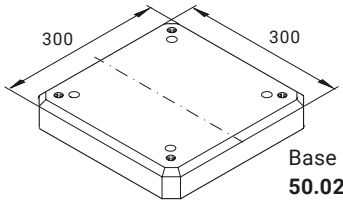

Base plate 6
50.02.0088

B46.07.274*

Weight: 10.5 kg

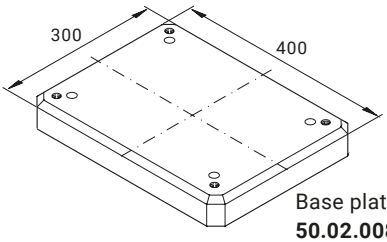

Base plate 7
50.02.0089

B46.07.275*

Weight: 12.1 kg

*With fastening accessories

Base Plates

Heavy-Duty Base Plates

The following heavy-duty base plates ensure the stability of heavy machine frames, gantries and stands. They are painted black and pre-drilled for connecting certain basic profiles. Plates without a drilling pattern have only the threads and bores necessary for attaching it to the floor. On request, we will be happy to design a base plate for your particular application or manufacture it according to your drawing of the drilling pattern.

Material: Grey cast, painted black

Fastening example

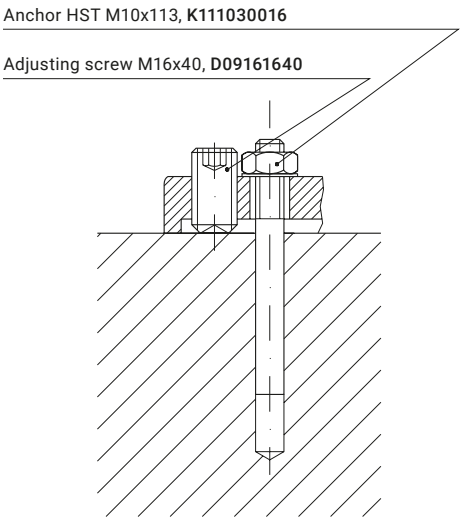

25 | 40 | **50** | 60

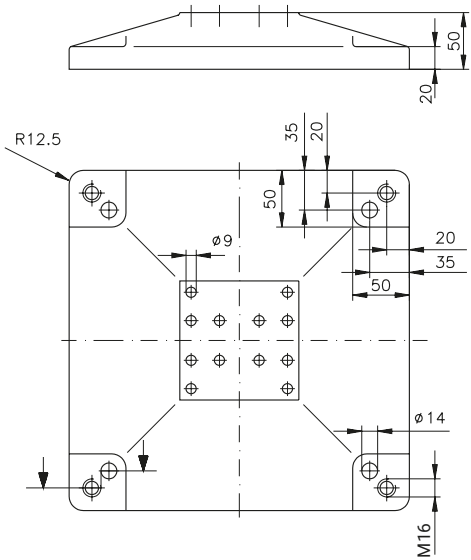

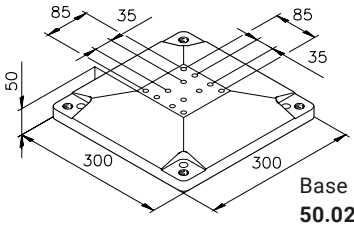

Base plate 4
50.02.0028

Connection bores
for mk 2000 (50x50),
mk 2004 (50x100),
mk 2005 (100x100),
mk 2011 (100x100),
mk 2018 (50x50) and
mk 2019 (50x50) profile

Weight: 6.8 kg

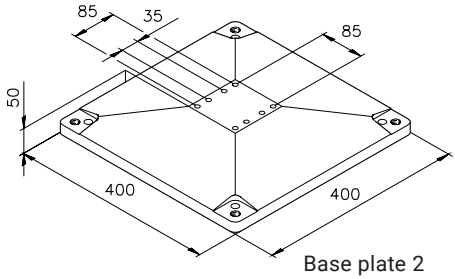

Base plate 2
50.02.0026

Connection bores
for mk 2004 (50x100),
mk 2005 (100x100) and
mk 2011 (100x100)

Weight: 11.5 kg

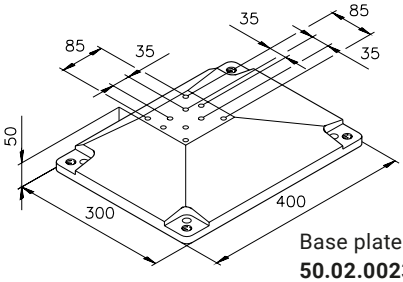

Base plate 1
50.02.0023

Connection bores
for mk 2000 (50x50),
mk 2004 (50x100),
mk 2005 (100x100),
mk 2018 (50x50) and
mk 2019 (50x50) profile

Weight: 8 kg

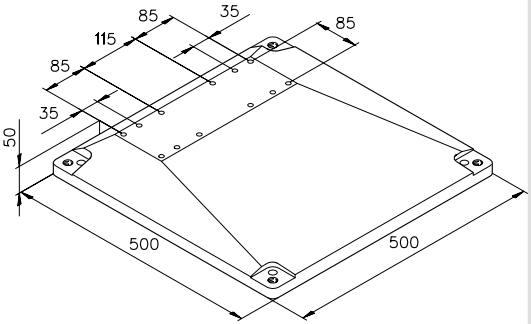

Base plate 5
50.02.0029

Connection bores
for 2 x mk 2004 (50x100),
mk 2005 (100x100) and
mk 2011 (100x100)

Weight: 16.6 kg

Support Brackets

The support brackets for 40 x 40 mm profiles are frequently used to anchor guarding partitions to the floor. No end service is required on the profile itself. Height differences of up to 10 mm can be compensated by moving the profile.

Material: Tumbled aluminium

25 | 40 | 50 | 60 M8x16

Fastening example

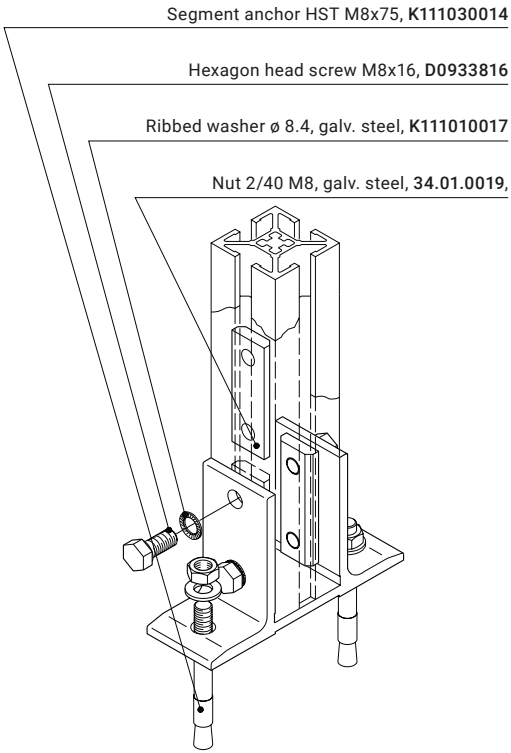

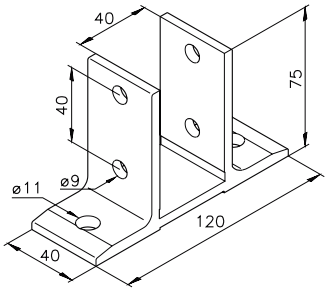

Support bracket 40/1
67.02.0004

for 40 x 40 profile

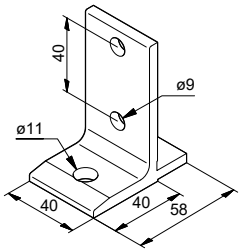

Support bracket 40/2
67.02.0009

for 40 x 40 profile

Support Brackets

Support brackets (listed as “base” below) for 50 x 50 mm profiles are used to anchor stands or columns to the floor. No end service is required on the profile itself.

Material: Die-cast aluminium

25 | 40 | **50** | 60

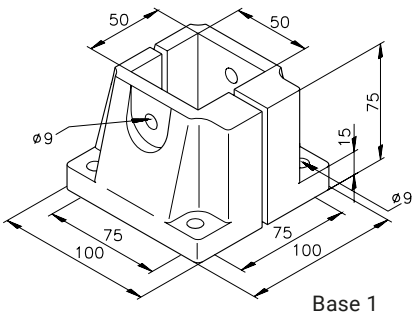

Base 1
65.00.0001

for 50 x 50 profile

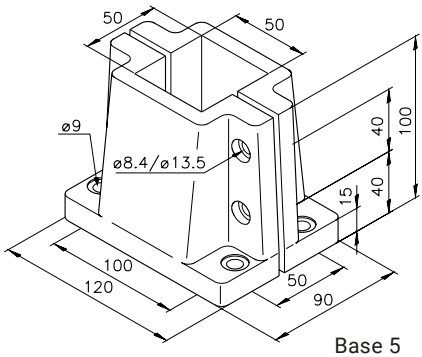

Base 5
65.00.0005

for 50 x 50 profile

Support Brackets

Retaining Angles

Retaining angles can be retrofitted onto structures such as frames, belt conveyors or other structures with levelling feet in order to anchor and fix them to the floor. No end service is required on the profile itself.

Material: Galvanised steel

Fastening example

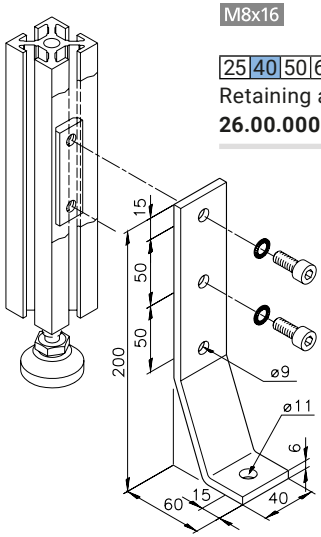

M8x16

25 **40** 50 60

Retaining angle 1

26.00.0006

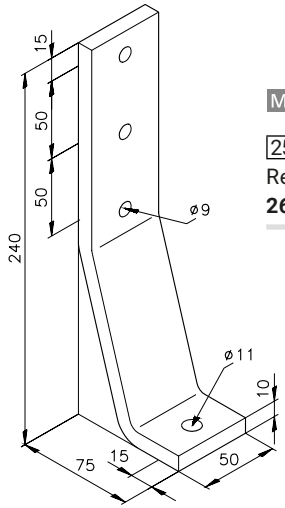

M8x20

25 40 **50** 60

Retaining angle 2

26.00.0012

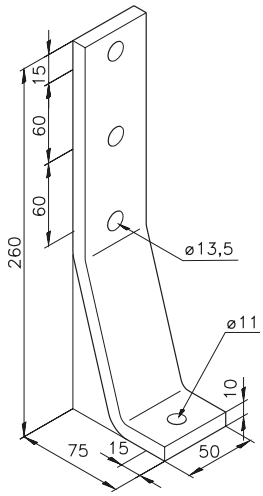

M12x25

25 40 50 **60**

Retaining angle 60/1

26.00.0060

Notes

Fixed and Swivel Casters, Type A

The casters are made from galvanised, chromated steel. The housings of the type A variety can be connected to either the face or the slot of a profile using a foot plate with an M10/M12 thread. The rubber tread on the wheels provides for very smooth operation. The wheels have ball bearings. All swivel casters are equipped with a total locking device.

M8x16 | 25 | 40 | 50 | 60

Foot plate R3
50.02.0093

Tumbled aluminium

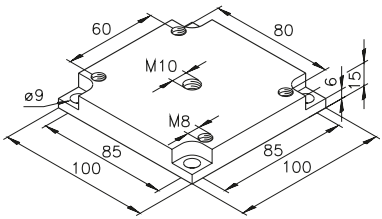

For mk 2005/mk 2011 and casters with ø 10.5 mm connection bores or 80/60 bore pattern

Fixed casters (A)

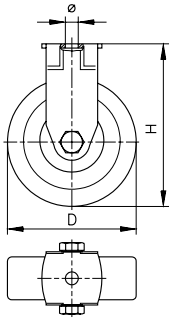

Swivel casters (A) with locking device

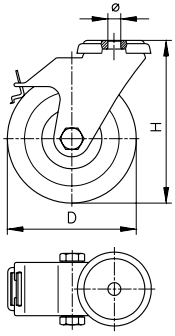

Wheel ø D [mm]	Wheel width [mm]	Load capacity [N]	Total height H [mm]	Connection bore ø [mm]	Item no.
Fixed casters (A)					
50	18	400	69	10.5	**K106001040**
75	25	600	98	10.5	**K106001041**
100	32	900	133	10.5	**K106001044**
100	32	900	133	12.5	**K106001042**
125	25	800	158	12.5	**K106001043**
Swivel casters (A) with locking device					
50	18	400	69	10.5	**K106000140**
75	25	600	98	10.5	**K106000141**
100	32	900	133	10.5	**K106000144**
100	32	800	133	12.5	**K106000142**
125	25	800	158	12.5	**K106000143**

Fixed and Swivel Casters, Type B

The casters are made from galvanised, chromated steel. The housings of the type B variety can be connected to a frame using the pad plates shown below. The wheels have ball bearings and feature a high load capacity. All swivel casters are equipped with a total locking device.

M8x25 | 25 | **40** | **50** | 60

Foot plate R1

50.02.0091

Tumbled aluminium

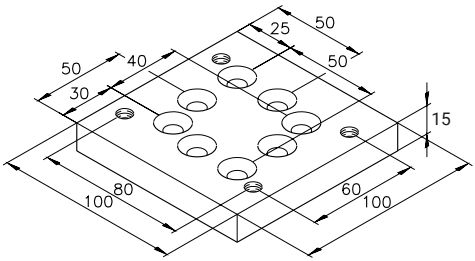

For attaching casters with an 80/60 bore pattern to the profile slot using two countersunk head screws

M8x25 | 25 | 40 | **50** | 60

Foot plate R4

50.02.0094

Tumbled aluminium

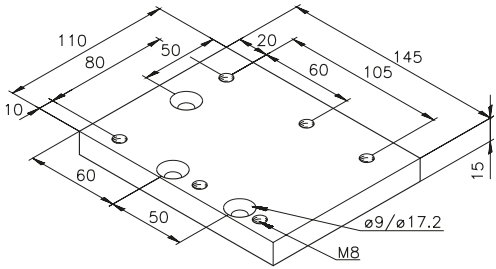

Fixed caster (B)

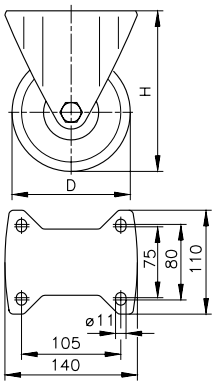

Swivel caster (B) with locking device

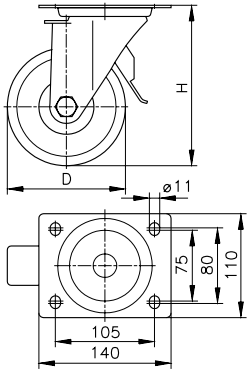

Wheel ø D [mm]	Wheel width [mm]	Load capacity [N]	Total height H [mm]	Bore pattern [mm]	Item no.
Fixed caster (B)					
125	40	7000	165	105/80	**K106001045**
125	40	7000	165	80/60	**K106001048**
Swivel caster (B) with locking device					
125	40	7000	165	105/80	**K106000145**
125	40	7000	165	80/60	**K106000148**

Section 6 Accessory Components

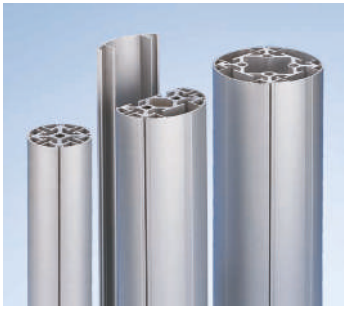

6 **Cover Profiles** 196

Hinges

Hinges 198

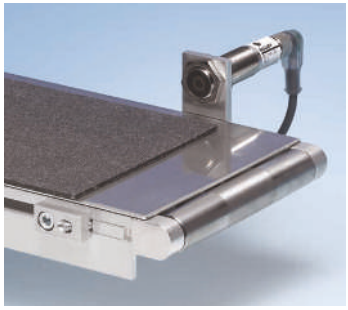

Installation Elements

Cable Ducts 202
Cable Clips 203
Sensor Holders 204
Pneumatic Components 205

Operating Elements

Handwheels 208
Clamping Levers 209

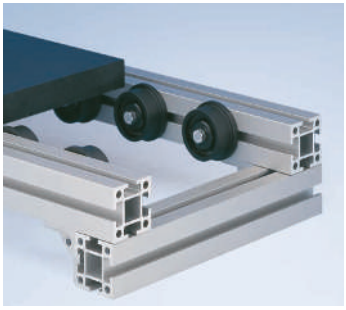

Conveying Elements

Mini-Rollers 210
Track Rollers 211

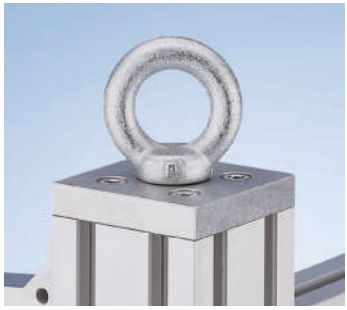

Other Accessories

Bumpers 214
Eye Bolts 215

Cover Profiles

Cover profiles have a curved cross section and are used to cover Series 40 profiles. They close the slots to create an attractive appearance with round contours. The profile can be clipped into the T-slot without additional fasteners. The resulting hollow space is well suited for running cables. Classical applications include table legs, frames, power supply columns or trade fair exhibits with special design requirements.

Material: Anodised aluminium

6

25 | **40** | 50 | 60

Fastening example

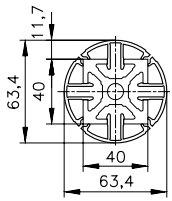

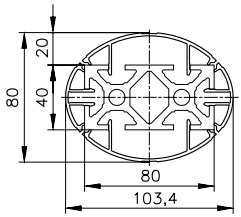

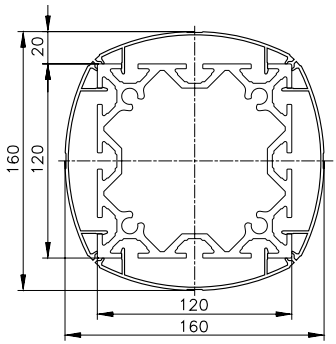

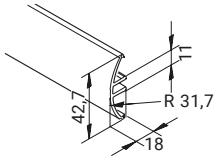

Profile mk 2040.43

0.41 kg/m

Stock length	**54.43.5100**
Cut	**54.43. ....**

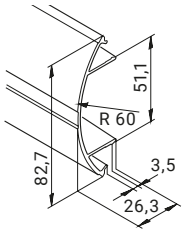

Profile mk 2040.44

0.85 kg/m

Stock length	**54.42.5100**
Cut	**54.42. ....**

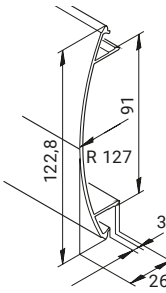

Profile mk 2040.44

0.85 kg/m

Stock length	**54.44.5100**
Cut	**54.44. ....**

The mk 2040.85 cover profile has a flat cross section and is used to cover Series 40 profiles with an edge length of 120 mm. This closes the slots to prevent dirt from accumulating. When used as a tread surface, the structure also provides slip resistance. The profile does not require screws for attachment and can be clipped into the T-slots of existing structures without the need for additional fasteners.

Material: Anodised aluminium

25 | 40 | 50 | 60

Fastening example

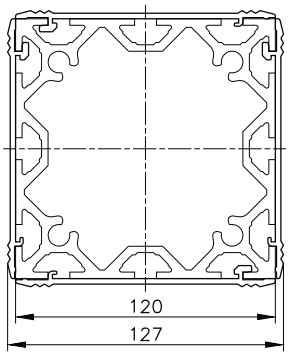

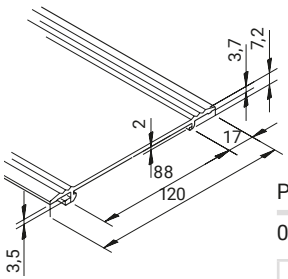

Profile mk 2040.85

0.93 kg/m

Stock length	**54.85.5100**
cut	**54.85. ....**

Hinges

Hinges are used to connect profiles at an angle of your choosing (for limits, see the information provided for each item). The hinges are secured in place by tightening the cylinder head screw. The maximum load is 200 kg in the longitudinal direction of the profile. The hinge should be reinforced for use with high torque.

Material: Tumbled aluminium

25 | 40 | 50 | 60

Fastening example

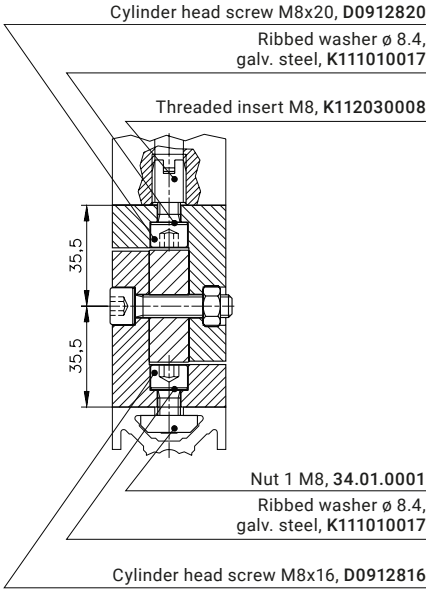

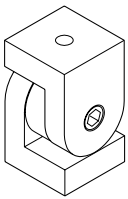

Hinge B21
B46.01.221

Angle of rotation: + - 90°

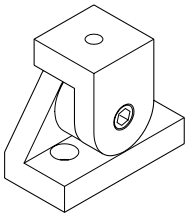

Hinge B22
B46.01.222

Angle of rotation: + - 53°

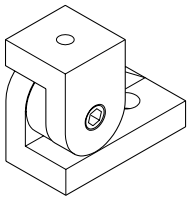

Hinge B23
B46.01.223

Angle of rotation: + 90°/ - 37°

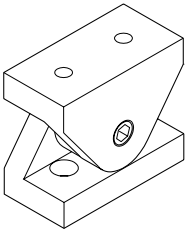

Hinge B24
B46.01.224

Angle of rotation: + - 53°

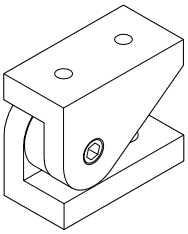

Hinge B25
B46.01.225

Angle of rotation: + 90°/ - 37°

Hinges

The following hinges have a slide bushing that allows you to adjust the angle even when the joint is tightened. The hinges are designed to bear radial loads.

Material: Tumbled aluminium

25 | 40 | 50 | 60

Dimensional sketch

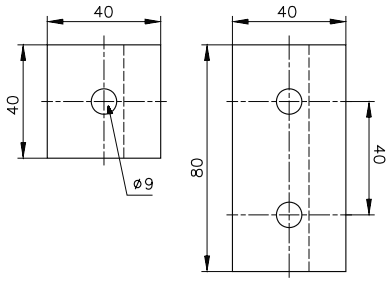

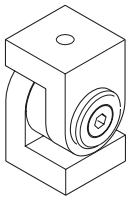

Hinge B01
B46.01.201

Angle of rotation: + - 90°

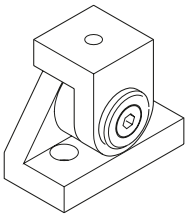

Hinge B02
B46.01.202

Angle of rotation: + - 53°

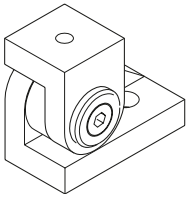

Hinge B03
B46.01.203

Angle of rotation: + 90°/ - 37°

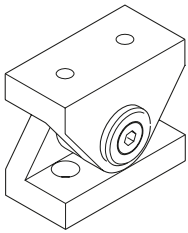

Hinge B04
B46.01.204

Angle of rotation: + - 53°

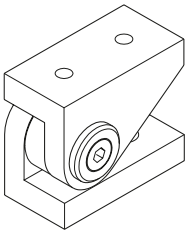

Hinge B05
B46.01.205

Angle of rotation: + 90°/ - 37°

Hinges

6

Hinges

Hinges are used to connect profiles at an angle of your choosing (for limits, see the information in the fastening example). The hinges are secured in place by tightening the retaining bolt. The maximum load is 300 kg in the longitudinal direction of the profile. The hinge should be reinforced for use with high torque.

Material: Tumbled aluminium

25 40 **50** 60 M8x20

Fastening example

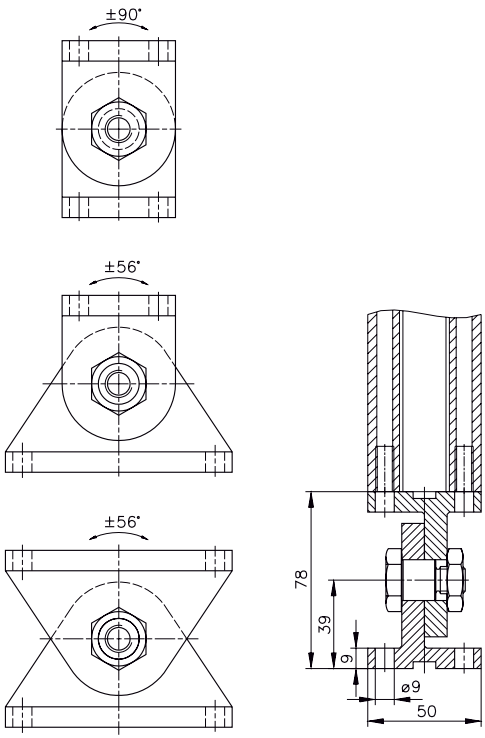

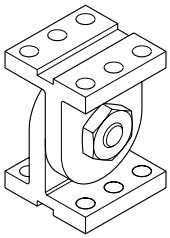

Hinge B50
B46.01.250

for 2 x mk 2000 (50x50) faces

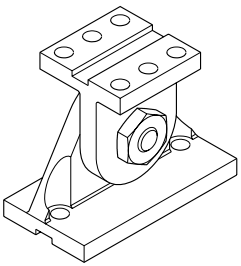

Hinge B51
B46.01.251

for mk 2000 (50x50) face to Series 50 slot

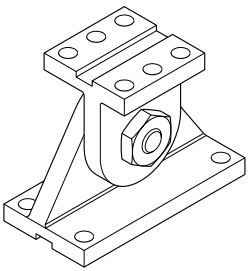

Hinge B52
B46.01.252

for mk 2000 (50x50) face to mk 2004 (50x100) face

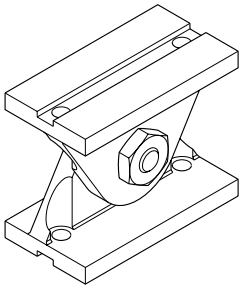

Hinge B53
B46.01.253

for series 50 slot
to Series 50 slot

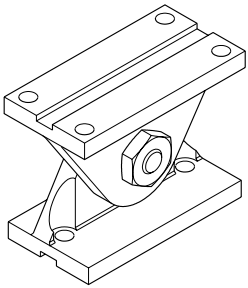

Hinge B54
B46.01.254

for mk 2004 (50x100)
face to Series 50 slot

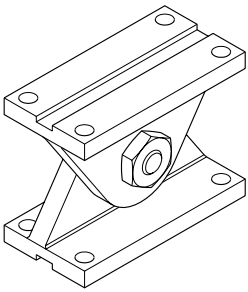

Hinge B55
B46.01.255

for 2 x mk 2004
(50x100) faces

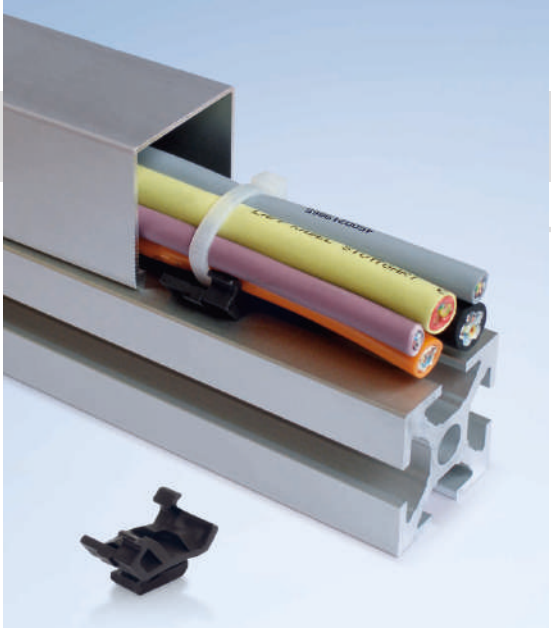

Installation Elements

Cable Ducts

Aluminium cable ducts are an attractive and functional alternative to conventional electrical and cable coverings. The ducts can be clipped in quickly and easily using the appropriate clip for the series. You can also attach the cables to the profile using conventional cable ties.

Material: Anodised aluminium

6

Clip material: PP plastic

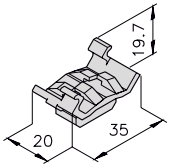

25 **40** 50 60

Clip 40
mk 2546

Clip material: PA6 plastic

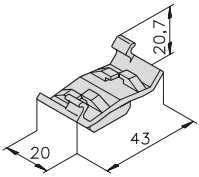

25 40 **50** 60

Clip 50
mk 2550

25 **40** 50 60

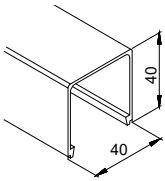

Profile mk 2040.50

0.51 kg/m

Stock length	**54.50.5100**
Cut	**54.50. ....**

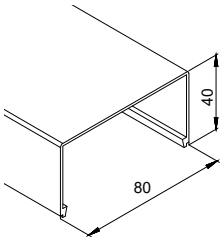

Profile mk 2040.51

0.67 kg/m

Stock length	**54.51.5100**
Cut	**54.51. ....**

25 40 **50** 60

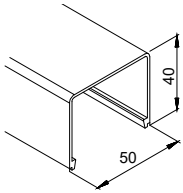

Profile mk 2051

0.56 kg/m

Stock length	**51.51.5100**
Cut	**51.51. ....**

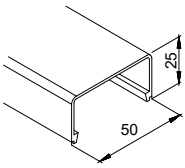

Profile mk 2050

0.43 kg/m

Stock length	**51.50.5100**
Cut	**51.50. ....**

Cable Clips

Cable clips for Series 40 and 50 profiles for different cable cross-sections and individual or multiple cables.

A1 cable clips are pushed into the T-slot together with the cable. The clip can then be released together with the cable.

C1 cable clips are inserted into the T-slot and fixed in place by rotating 90°. Individual cables or cable strands can be secured in the clip both lengthways and crossways to the profile using cable ties. In contrast to A1 clips, C1 clips can provide a certain degree of strain relief.

D1 cable clips are pushed into the T-slot. Individual cables can then be pushed into the clip. It is possible to remove the cable without removing the clip. If necessary, the cable can be additionally secured with a cable tie. The clip can be removed from the T-slot by rotating it 90°.

Material: plastic, black

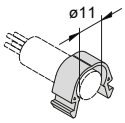

25 | **40** | 50 | 60

Clip A1 10.3, ø 11
98.01.1411-G9005

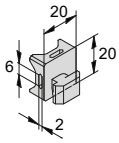

Clip C1 10.3, 20x20
98.01.5420-G9005

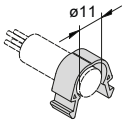

25 | 40 | **50** | 60

Clip A1 10.4, ø 11
98.01.1511-G9005

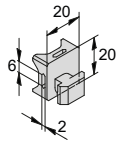

Clip C1 10.4, 20x20
98.01.5520-G9005

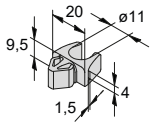

25 | **40** | 50 | 60

Clip D1 10.3, ø 11
98.01.6411-G9005

Further colours and cross sections available on request.

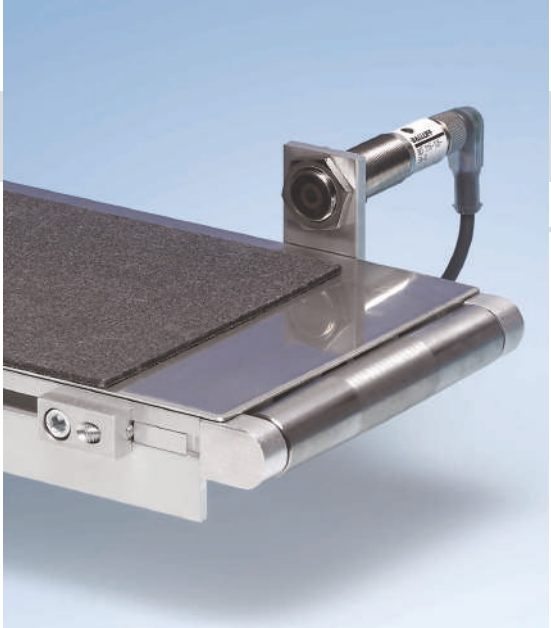

Sensor Holders

Sensor holders are used to attach proximity switches. They can be attached quickly and flexibly without additional profile services.

Material: Tumbled aluminium

25 | 40 | 50 | 60 M8x16

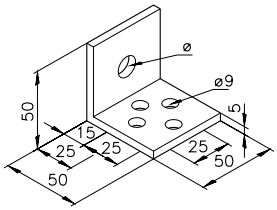

Sensor holder A
ø 13 – 16.00.0000
ø 19 – 16.00.0001
R1/4" – 16.05.0011

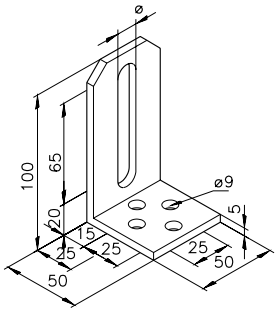

Sensor holder B
ø 13 – 16.00.0006
ø 19 – 16.00.0007

Material: Galvanised steel

25 | 40 | 50 | 60 M8x12

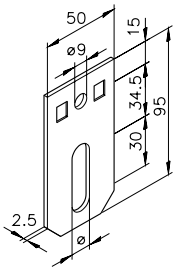

Sensor holder D
ø 9 – 16.00.0016
ø 13 – 16.00.0017
ø 19 – 16.00.0018

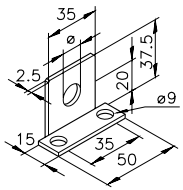

Sensor holder E
ø 9 – 16.00.0026
ø 13 – 16.00.0027
ø 19 – 16.00.0028

Pneumatic Components

The following pneumatic components allow the mk 2040.02 (40x80) and mk 2040.03 (80x80) profiles to be used as a compressed air line, eliminating the need to install additional components. The system is designed for a maximum pressure of 6 bar. ø 8.4 mm bores must be drilled at the necessary locations to connect the components in the profile slot. The B46.03.007 drilling jig can be used to determine the exact positioning of the bores, or the connection plate can be used directly as a jig.

For drilling jigs, on page 340

25 | 40 | 50 | 60

Lateral fastening example

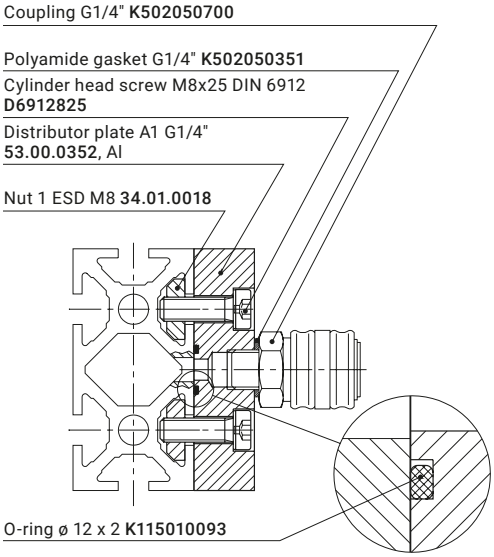

An O-ring is used to seal the connection when the distributor plate is fastened to the profile slot. It fits perfectly into a circular slot in the connection plate.

Face fastening example

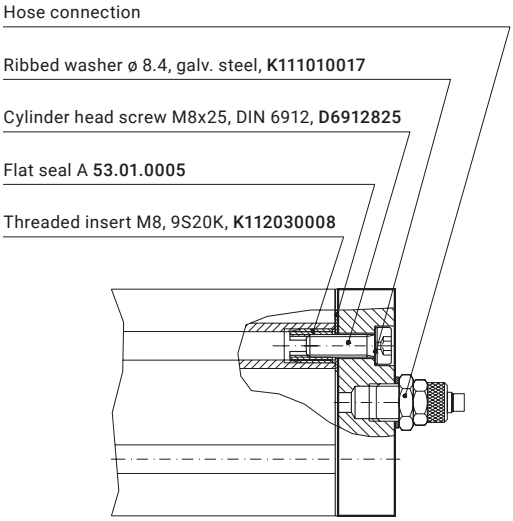

A flat seal is used to seal the connection when the distributor or connection plate is fastened to the profile's face.

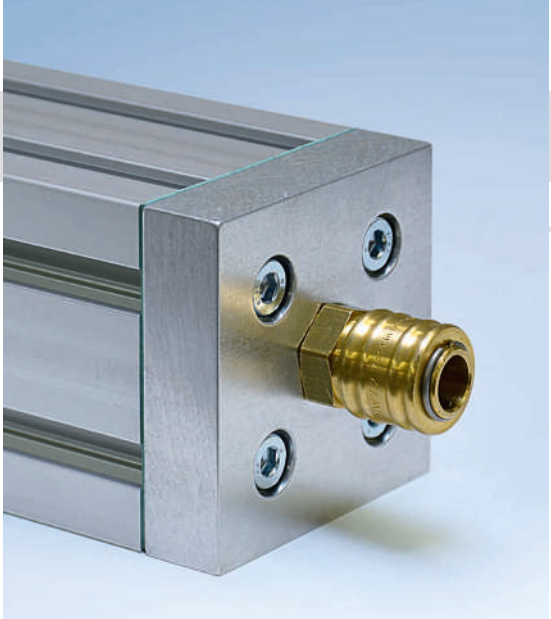

Installation Elements

Pneumatic Components

A flat seal is required when fastening the plates to the profile face; when fastening to the side of the profile, an O-ring is used to seal the joint between the profile and the plate. The coupling is threaded into the plate with a sealing ring. See also the fastening examples. The system is designed for a maximum pressure of 6 bar.

6

25 | 40 | 50 | 60

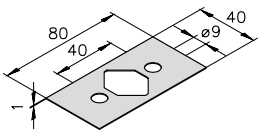

Flat seal A
53.01.0005

PU plastic, soft

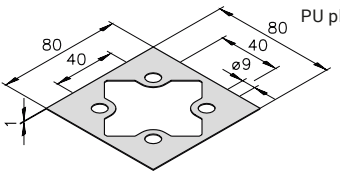

Flat seal B
53.01.0006

PU plastic, soft

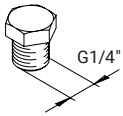

Plug screw
G1/4"
K5BA100008

G1/2"
K5BA100007

Brass

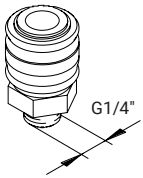

Coupling G1/4"
K5BA100078

Brass

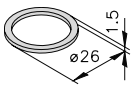

Polyamide sealing ring
G1/2"
K5BB100018

PA plastic

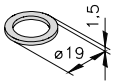

Polyamide sealing ring
G1/4"
K5BB100016

PA plastic

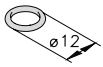

O-ring DIN3771
ø 12 x 2 mm
K115010093

NBR rubber

Pneumatic Components

We offer various plates for creating a compressed air system, depending on your particular application and profiles.

Material: Tumbled aluminium

Distributor plates

M8x25 DIN 6912

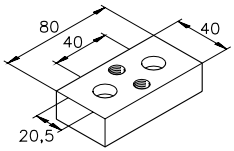

Distributor plate A18
G1/8"
53.00.0300

Distributor plate A14
G1/4"
53.00.0303

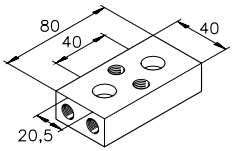

Distributor plate A28
G1/8"
53.00.0301

Distributor plate A24
G1/4"
53.00.0304

Closure plates

M8x25 DIN 6912

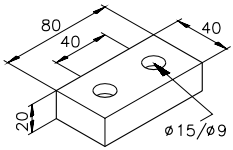

Closure plate A
53.00.0100

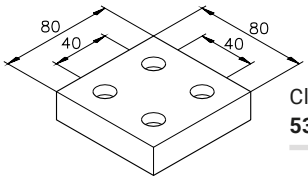

Closure plate B
53.00.0101

Connection plates

M8x25 DIN 6912

Connection plate A
G1/4"
53.00.0352

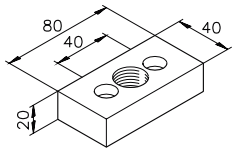

Connection plate A
G1/2"
53.00.0200

Connection plate B
G1/2"
53.00.0201

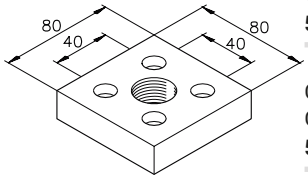

Connection plate C
G3/4"
53.00.0202

6

Operating Elements

Handwheels

Handwheels in various designs can be mounted on spindles in adjusting units, or used in conveyor technology to adjust the side rails. Handwheels with outer diameters of 100 mm or larger have handles that can be folded away and lowered.

Material: PP plastic, matte black

6

Fastening example

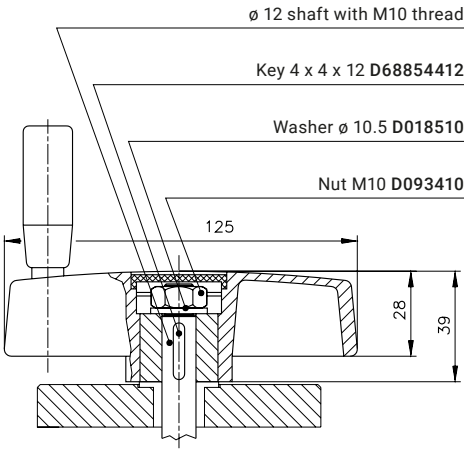

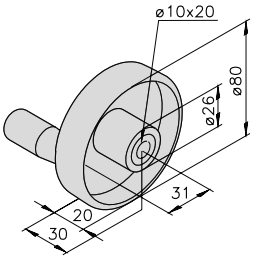

Handwheel ø 80
K110020028

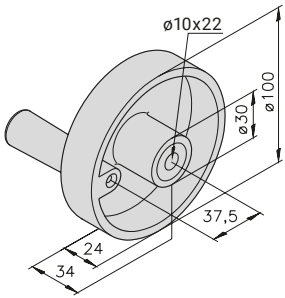

Handwheel ø 100
K110020030

Folding handle

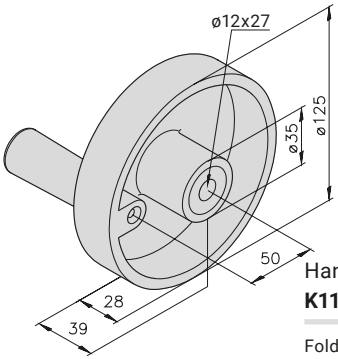

Handwheel ø 120
K110020031

Folding handle

Clamping Levers

Clamping levers can be used to manually adjust and lock attached components in any position. Applications include holders for side rails, slide carriages or telescoping profiles.

Fastening example

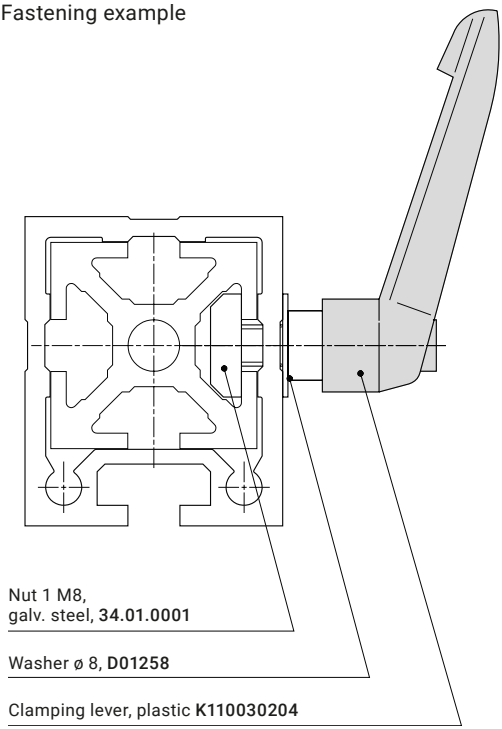

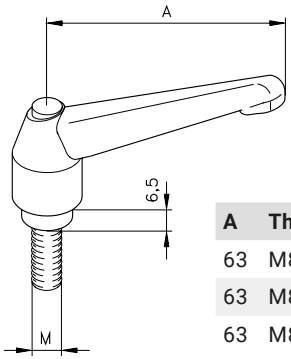

Clamping lever, die-cast zinc

A	Thread	Item no.
63	M8x16	**K110030055**
63	M8x20	**K110030056**
63	M8x25	**K110030057**

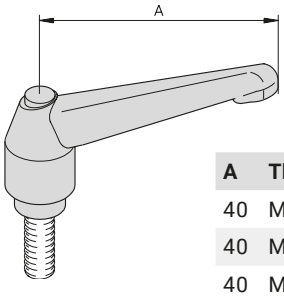

Clamping lever, PA plastic

A	Thread	Item no.
40	M6x15	**K110030200**
40	M6x20	**K110030201**
40	M6x25	**K110030202**
63	M8x16	**K110030204**
63	M8x20	**K110030205**
63	M8x25	**K110030206**

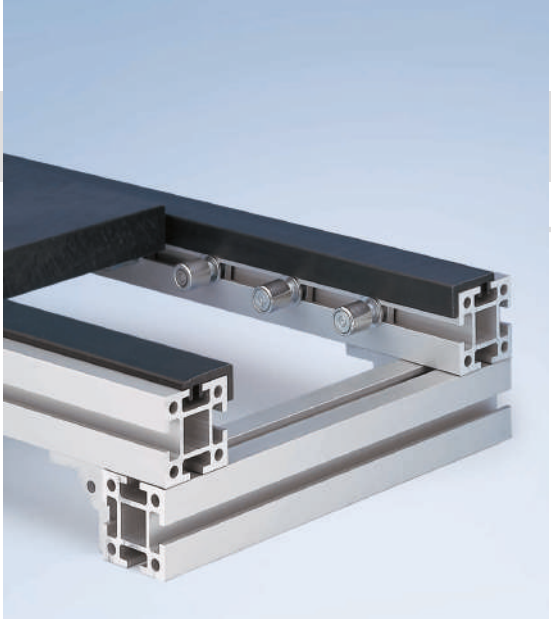

Mini-Rollers

Mini-rollers are used for the manual transfer of workpiece carriers, among other applications. They can be used with Series 40 and Series 50 construction profiles. The roll distances depend on the size of the conveyed material.

25 40 50 60

Wear strips
Starting on page 158

Fastening example

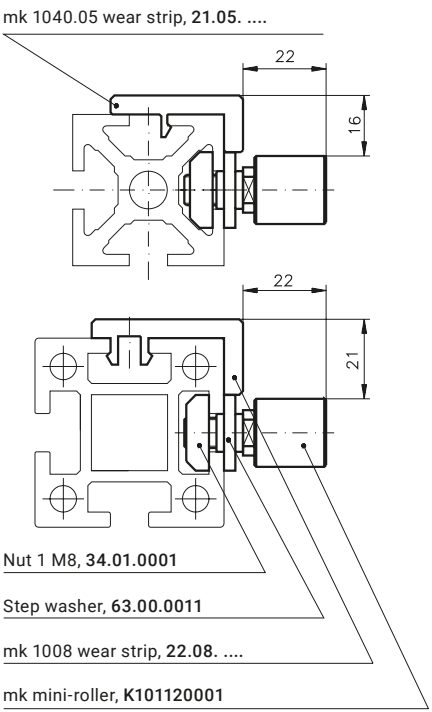

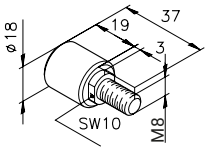

mk mini-roller
K101120001

Blued steel

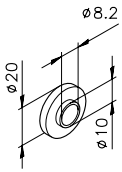

Step washer
63.00.0011

Galvanised steel

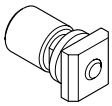

mk mini-roller
B60.04.002

with fastening accessories
80 N max. radial load

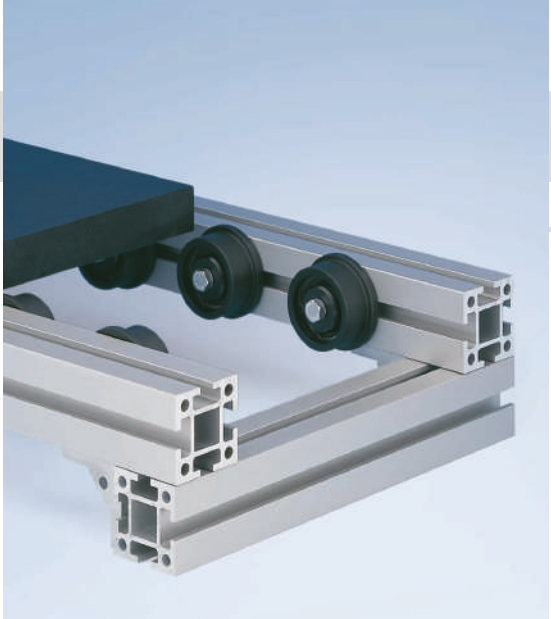

Track Rollers

Track rollers are used for the manual transfer of workpiece carriers, among other applications. They are often used when frames or other system components need to be moved linearly. The following varieties of flange, track and guide rollers are available for various applications.

25 40 50 60

6

Fastening example

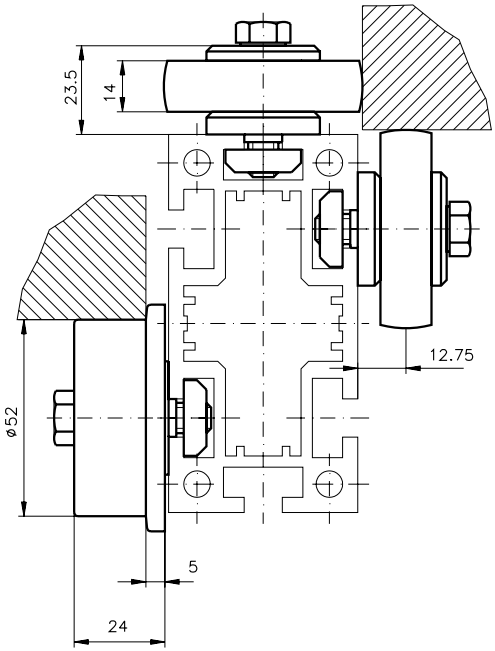

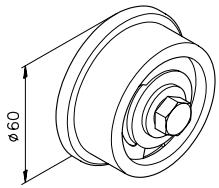

Flange roller 1
B60.00.001

Blued steel roll,
500 N max. radial load

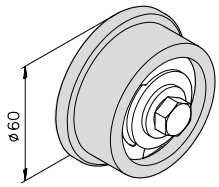

Flange roller 2
B60.00.002

POM plastic roll,
200 N max. radial load

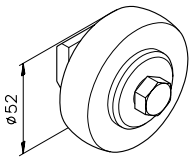

Track roller
B60.01.001

Blued roller bearing steel,
1000 N max. radial load

*With fastening accessories

Conveying Elements

6

Track Rollers

Track rollers are used for the manual transfer of workpiece carriers, among other applications. They are often used when frames or other system components need to be moved linearly. The rollers are available with a variety of flanges and designs for various applications.

Fastening example

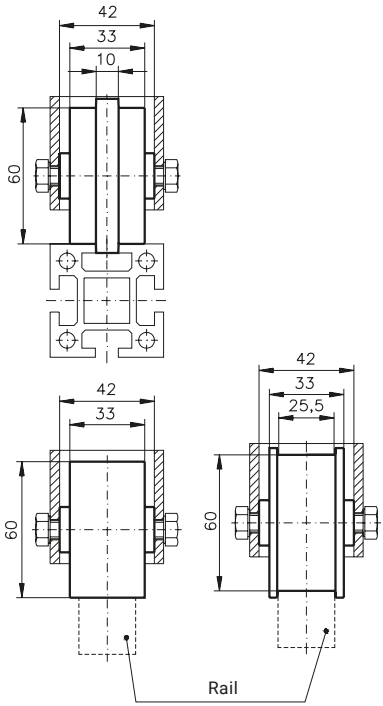

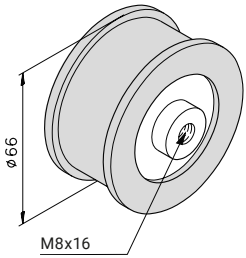

25 **40** 50 60
Flange roller A1
B60.00.004

25 40 **50** 60
Flange roller A1
B60.00.003

Steel roll,
1,000 N max. radial load

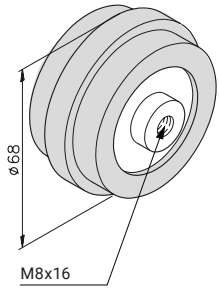

25 **40** 50 60
Guide roller A2
B60.02.019

25 40 **50** 60
Guide roller A2
B60.02.002

POM plastic roll,
200 N max. radial load

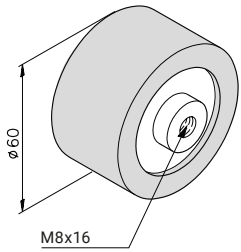

25 **40** 50 60
Track roller A4
B60.01.005

25 40 **50** 60
Track roller A4
B60.01.003

POM plastic roll,
200 N max. radial load

Notes

Other Accessories

Bumpers

Bumpers are used to dampen shocks and noise in doors, flaps, caps, carriages and other applications.

Material: Rubber, Shore 55

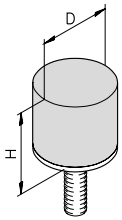

Bumper, type D

D	H	Thread	Item no.
20	12	M6x12	**K113060004**
20	15	M6x15	**K113060001**
30	28	M8x20	**K113060002**
50	21	M10x28	**K113060003**

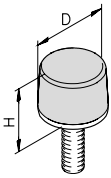

Bumper, type K/D

D	H	Thread	Item no.
25	17	M6x18	**K113060006**
50	18	M10x28	**K113060007**

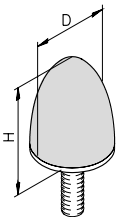

Bumper, type KP/D

D	H	Thread	Item no.
30	36	M8x10	**K113060012**
30	36	M8x20	**K113060011**

Fastening example

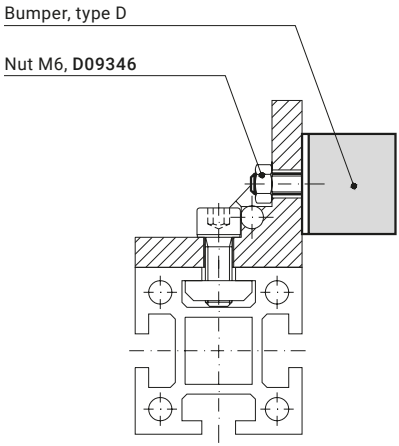

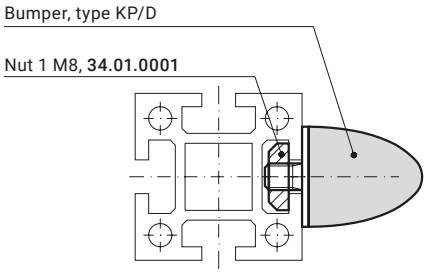

Eye Bolts

Eye bolts for use as lifting devices can be attached to steel foot plates or to plates 4 and 5 shown here. The maximum load capacity refers to vertical loads.

Material: Galvanised steel

Foot plates
starting on page 177

Fastening example

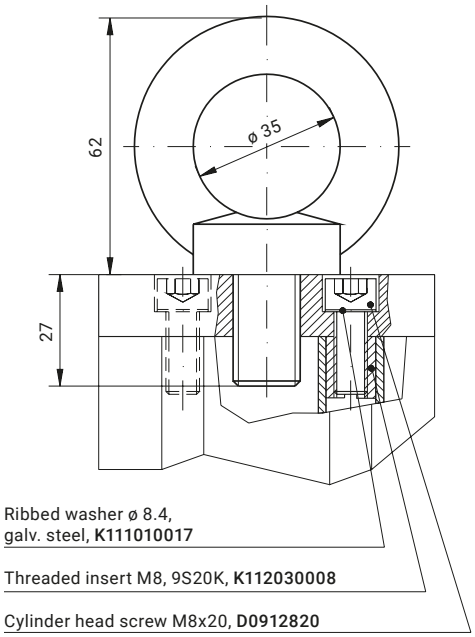

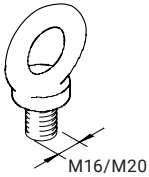

Eye bolt*
M16 DIN 580
D058016

7,000 N load capacity

Eye bolt*
M20 DIN 580
D058020

12,000 N load capacity

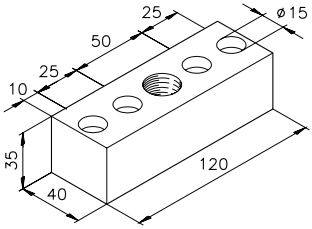

25 | 40 | 50 | 60

Plate 4 M20
50.09.0040

12,000 N load capacity

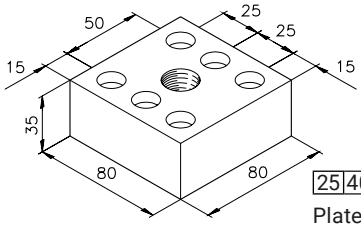

25 | 40 | 50 | 60

Plate 5 M20
50.09.0041

12,000 N load capacity

*Not a verified lifting device

Section 7 Guarding

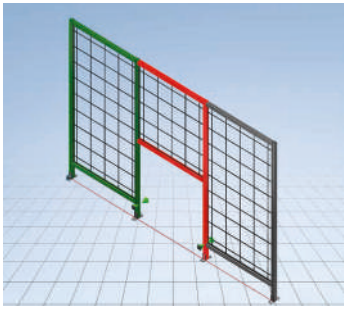

Notes on Guarding

Guarding Configurator 218
Safety Distances 219
System Selection 221

Partitions and Doors

Partitions 222
Swing Doors 224
Sliding Doors 226
Lifting Doors 228
Posts 230
Captive Fastening System 232

Windows

Windows, Single-leaf 234
Windows, Double-leaf 236
Sliding Windows 237
Folding Windows 238

Panelling

Information on Panelling 240
Closed Panels 241
Grid Panels 244
Perforated Sheets 245
Edge Profiles 246
Panelling with Fastening Accessories 248

Door and Window Components

Hinges 256
Hinges for Panelling 260
Ball Latches 261
Door Stop 261
External Locks 262
Internal Locks 263
Tower Bolts 264
Roller Units 265

Safety Accessories

Safety Interlocks 266
Mechanical Solenoid Latches 270
Electronic Solenoid Latches 271
Slam Latches 272
Emergency Opener for Slam Latch 273

Handles

Bracket Handles 274
Profile for Strip Handles 277

Floor Elements

→ See Section 5

Notes on Guarding

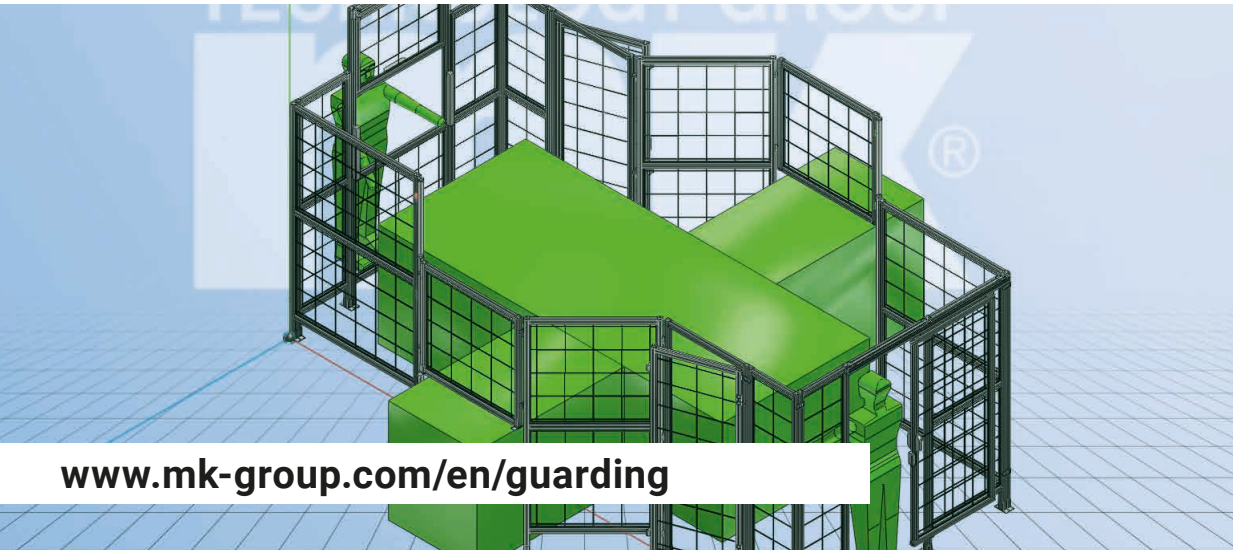

www.mk-group.com/en/guarding

Guarding Configurator

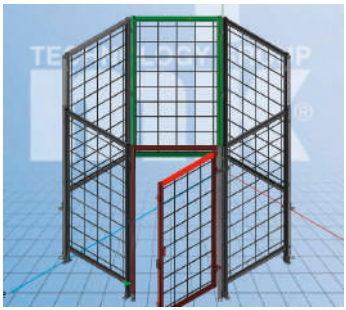

- Reduce your development and design time
- Large selection of panelling materials and door versions
- Standardised components for reduced costs
- No CAD system or CAD knowledge necessary
- Design in three dimensions with intuitive user guidance

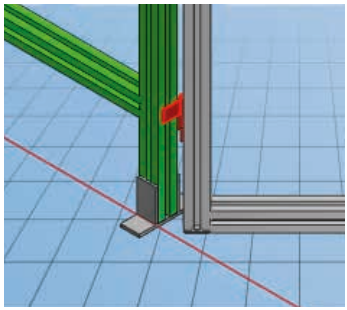

- Option to import DXF layouts
- Export 3D drawings to IGES, STEP and JPEG format
- Automatically generate saw lists, weight estimates and bills of materials for individual parts and assemblies
- Choose your preferred degree of assembly (raw material/ assemblies/turnkey)

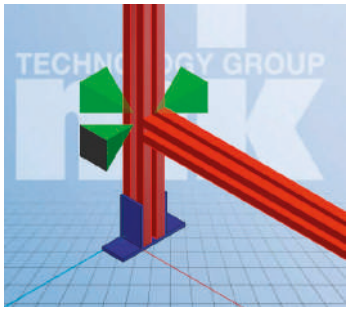

- Posts and partitions can be connected at variable angles from 0° bis 135°
- Automatic determination of support brackets
- Full/half support brackets and end caps can be manually selected and combined
- Pillar-panel solution: End cap options allows for quick disassembly using straight plate fasteners

Safety Distances

Our guarding has a flexible, modular design to allow you to protect your systems, machines and production areas effectively and economically. Choose from a wide range of machine housings, protective fences, panelling, doors and windows, all of which can be electronically secured if desired. It is also a cinch to connect pneumatically, hydraulically or electrically operated door elements to your machine control system. All mk guarding is designed and manufactured in accordance with the safety standards applicable in your country. You can be sure that you and your employees are always on the safe side.

Legally mandated safety distances to hazards are defined to ensure safety. Choose the appropriate panelling for your required safety distance. Closed panelling such as sheet metal, polycarbonate or glass have a required safety distance of 0 mm. Open panelling such as welded grids or wire meshes have a required safety distance of 200 mm (for 40 x 40 mm openings). With the preferred partition method, standard frame heights of 1400/2000 mm and 1460/2060 mm are available according to the height of your particular hazard. Custom heights are available on request.

Distance from hazard for 1400 mm frame height

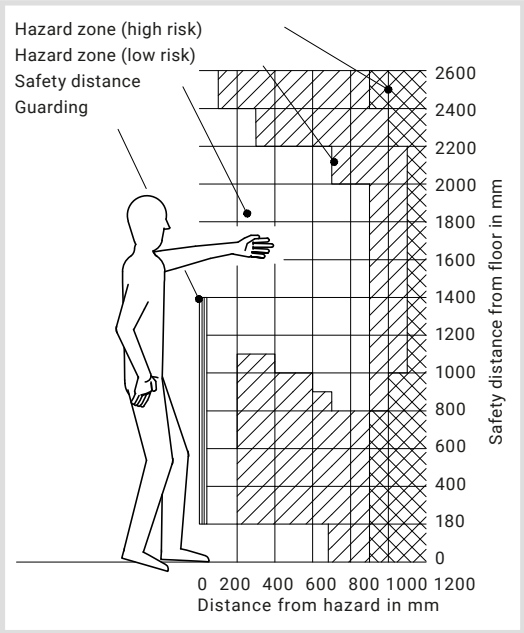

Distance from hazard for 2000 mm frame height

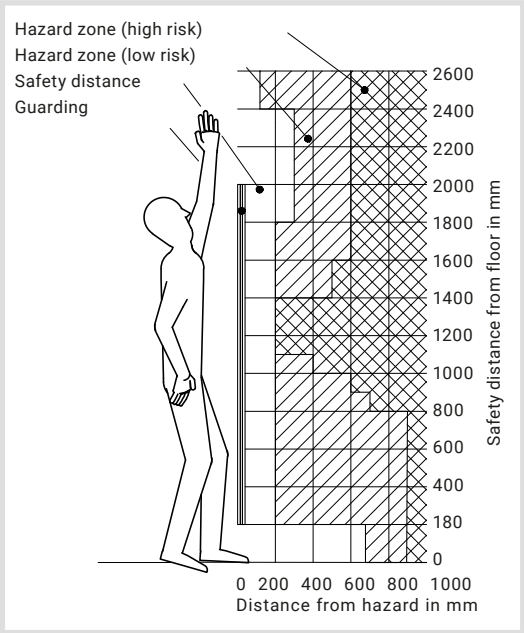

These distances are in accordance with the DIN EN ISO 13857:2008-06 standard (Safety distances to prevent hazard zones being reached by upper and lower limbs).

Notes on Guarding

7

» Machine housings and protective fences for increased occupational safety. «

Our guarding range is based on the mk profile system and offers functional machine housings, enclosures and protective fences. Their flexible, modular design ensures that systems, machines and production areas can be secured effectively and economically.

The System Selection section to the right shows the three possible versions. The partition method is the preferred method and the standard design used by mk. Therefore, the various modules are shown in full only for the partition method in the following section.

The various methods are based on the same grid dimensions. This ensures that all systems remain modular and compatible. mk also offers custom solutions tailored to our customers' specific needs.

The floor clearance of the guarding is 180 mm as standard, which allows for floor cleaning without compromising safety. The profile structure's favourable mass-to-strength ratio offer ergonomic benefits when handling and installing the elements.

System Selection

ECO Solution

Because it requires less material, the ECO solution is the most cost-effective alternative, but it requires significantly more installation work. mk therefore prefers the partition method, since the individual partitions can be quickly and easily installed on site.

Partition Method

The partition method, which is the standard at mk, is an economical, sturdy and easy-to-install type of guarding. Because of the flush connections between the partitions, this method is excellently suited for both long, straight paths and for designs with variable angles.

Pillar-Panel Solution

The pillar-panel solution features separate panel frames that are mounted between posts anchored to the floor. This allows you to easily remove individual partitions, and the captive fastening system allows you to do so in accordance with the Machinery Directive.

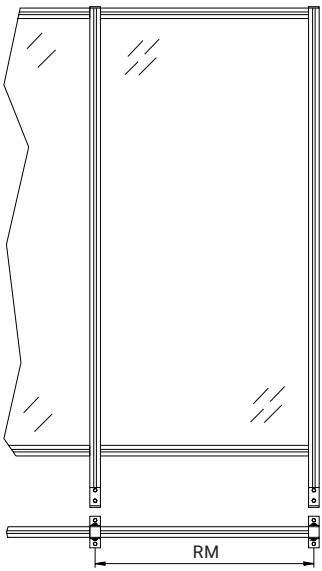

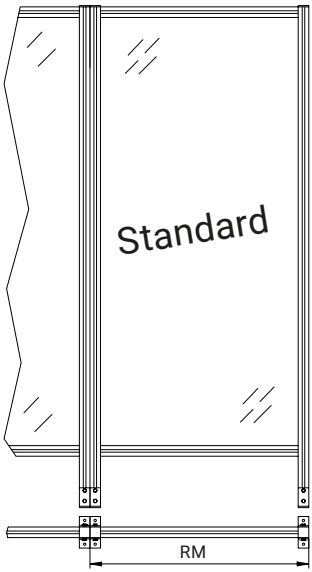

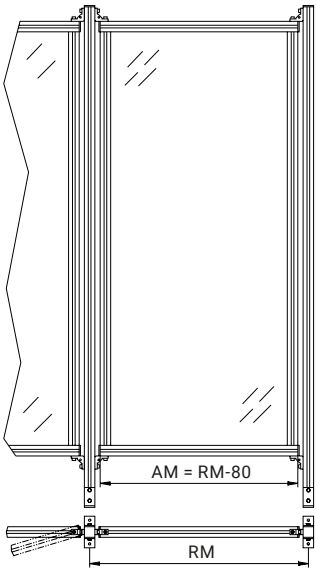

AM = outer dimension RM = grid dimension

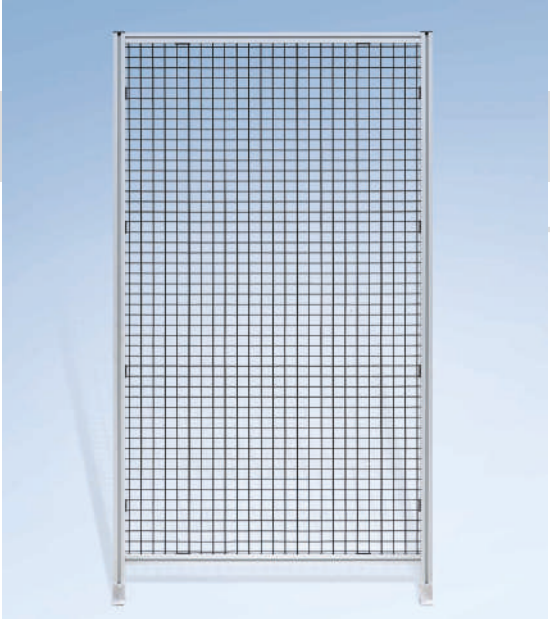

Partitions and Doors

Panelling starting on page 240
Corner blocks on page 97

7

Fastening example

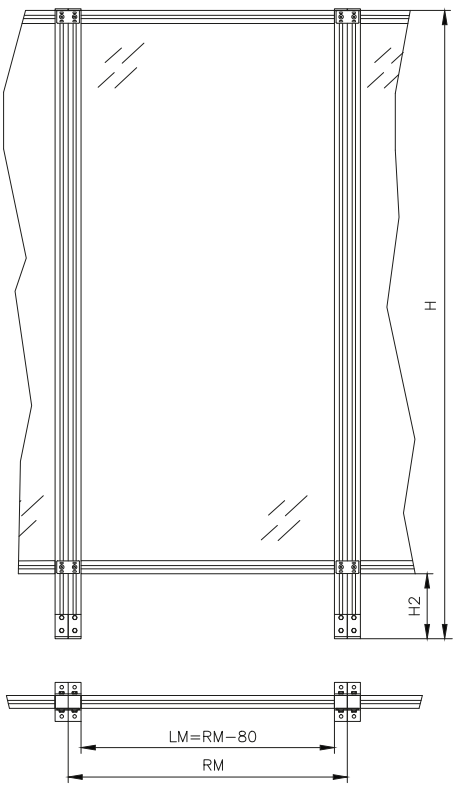

LM = clear dimension
RM = grid dimension

Partitions

... for the Partition Method

Our standard partitions and doors for the partition method are presented on the following pages, each with a fastening example. Plate fastening is the preferred method for connecting a partition to the adjacent partitions. The heights and grid dimensions can be adapted to customer-specific requirements.

Information required for ordering

- RM (500, 750, 1000, 1250 as standard, also 1500 and 2000 mm with vertical brace)
- H (2060 or 1460 mm as standard)
- H2 (180 mm as standard)
- H4 (optional for partitions with horizontal brace)
- Panelling

The panelling (e.g. polycarbonate) must be specified when ordering; otherwise the assemblies (B...) will be delivered without panelling.

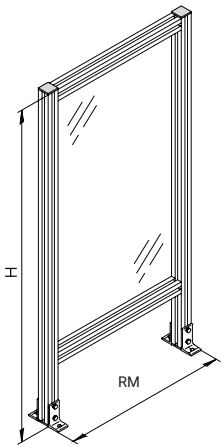

Simple partition
B69.51.001

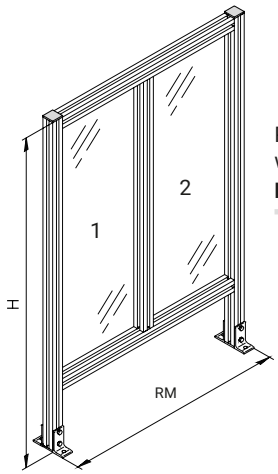

Partition
with vertical brace
B69.51.003

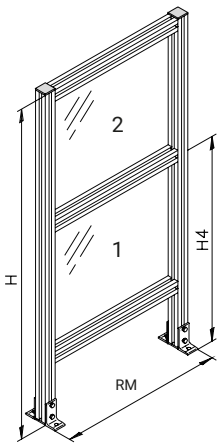

Partition
with horizontal brace
B69.51.002

Assemblies without panelling (B...):

mk 2040.31 (40x40) profile, connecting elements, support brackets, end caps

Panelling starting on page 240
Locks starting on page 262

Fastening example

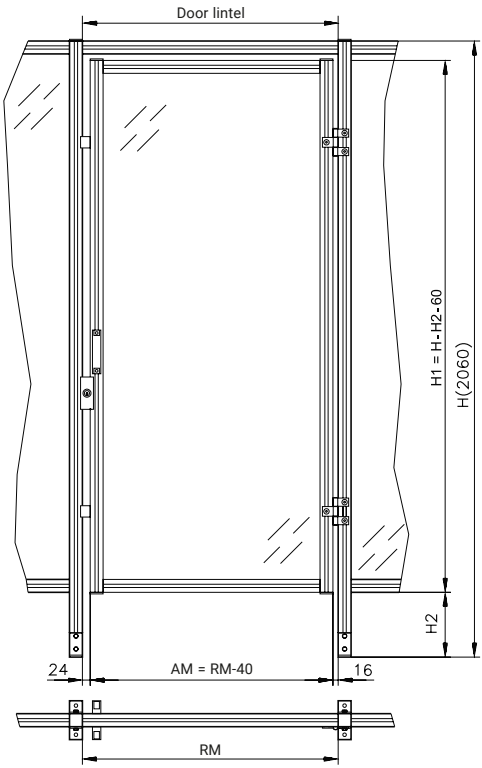

AM = outer dimension of swing door
RM = grid dimension between two partitions

Swing Doors

... for the Partition Method

A swing door is connected to the sides of partitions using hinges. The door lintel that connects the partitions provides the necessary stability. It can be used for both single-leaf and double-leaf swing doors.

The dimensions of the doors can be selected freely. The standard height from floor level is 2000 mm; based on the standard floor clearance height of 180 mm, this means H1 = 1820 mm. Various panelling, locks and safety interlocks are available and must be specified separately when ordering.

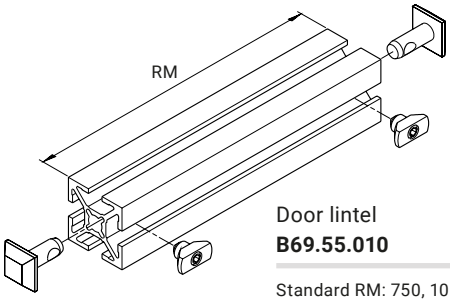

Door lintel
B69.55.010

Standard RM: 750, 1000, 1250, 1500, 2000 mm

Assemblies (B...):
mk 2040.40 (40x40) profile, connecting elements

Single Swing Doors

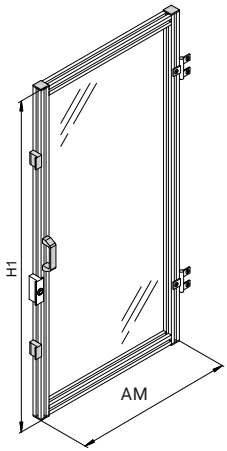

Swing door, single-leaf

DIN right
B69.60.001

DIN left
B69.60.002

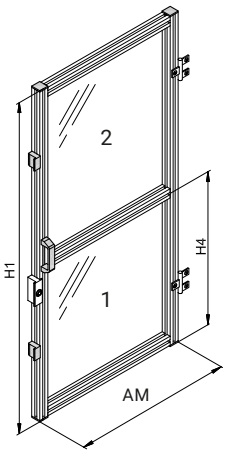

Swing door, single-leaf with horizontal brace

DIN right
B69.60.003

DIN left
B69.60.004

Assemblies without panelling (B...):

mk 2040.40 (40x40) profile, connecting elements, stops, handles, end caps, hinges, lock

Double Swing Doors

Double swing doors are equipped with additional interlocks on the top and bottom.

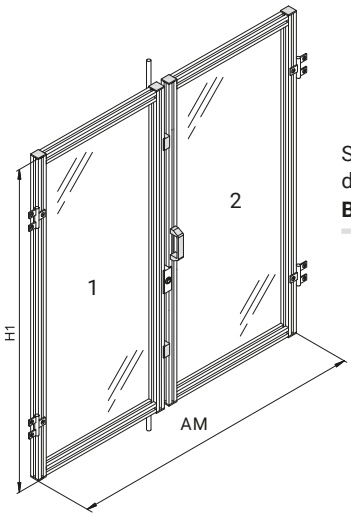

Swing door, double-leaf
B69.60.005

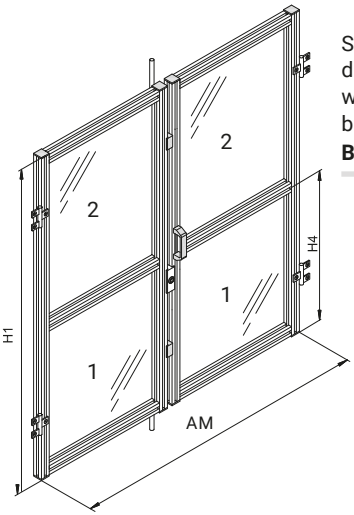

Swing door, double-leaf with horizontal brace
B69.60.006

Information required for ordering

- RM, H1, H4 optional, panelling, lock type

Panelling starting on page 240
Locks starting on page 262

Fastening example

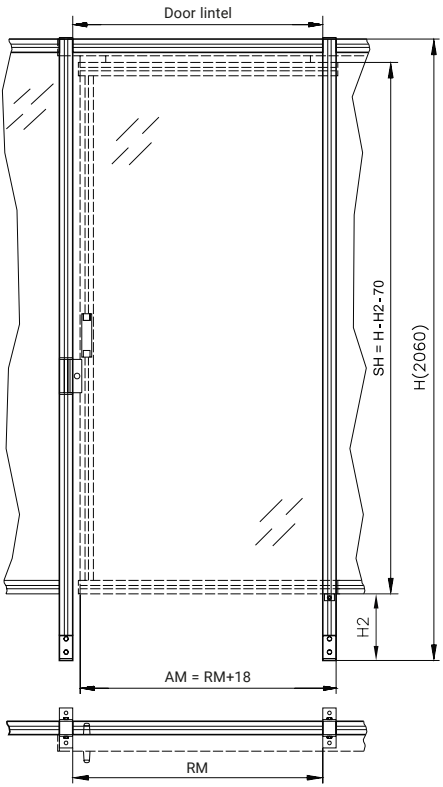

AM = outer dimension of sliding door
RM = grid dimension
SH = sliding door height

Sliding Doors

... for the Partition Method

The combination of track and B38.00.045 roller carriage provides an extremely sturdy sliding mechanism while also offering the benefits of a closed rail system. As with swing doors, sliding doors are mounted on the sides of two partitions, which are connected by the door lintel included in the assembly. Paneling is sold separate, do not forget it when ordering.

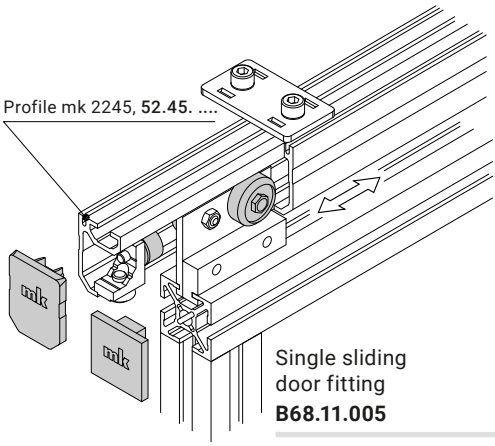

Single sliding door fitting
B68.11.005

L = 2 x RM + 40

Double sliding door fitting
B68.11.006

L = 4 x RM + 40

Sliding door roller carriage
B38.00.045

Max. 30 kg

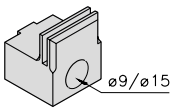

M8x25

Guide piece
19.00.0005

Black plastic

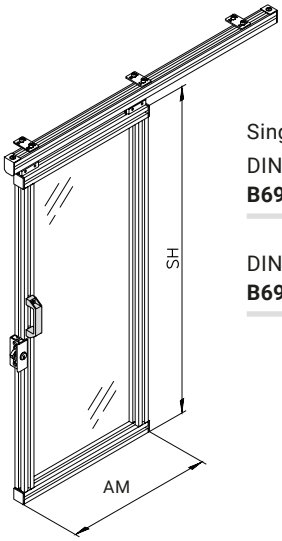

Single sliding door

DIN right
B69.61.015

DIN left
B69.61.016

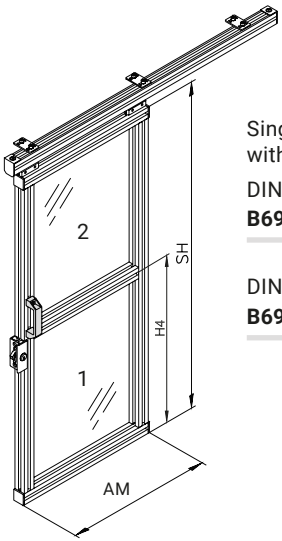

Single sliding door
with horizontal brace

DIN right
B69.61.017

DIN left
B69.61.018

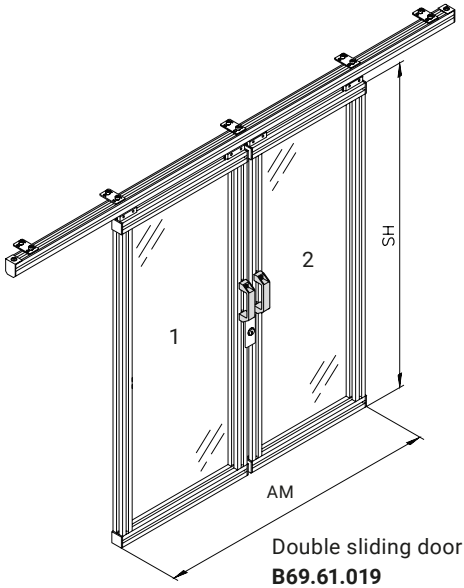

Double sliding door
B69.61.019

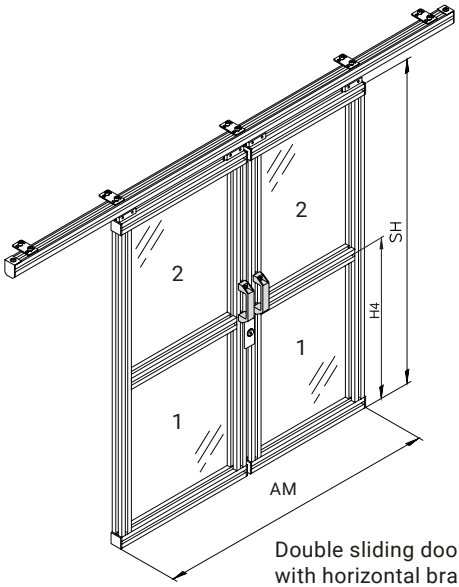

Double sliding door
with horizontal brace
B69.61.020

Assemblies without panelling (B...):

mk 2040.31 (40x40) and mk 2245 profiles, connecting elements, fitting set, handles, end caps, buffer, lock

Information required for ordering

- RM, SH, H4 optional, panelling, lock type

Panelling
starting on page 240

Fastening example

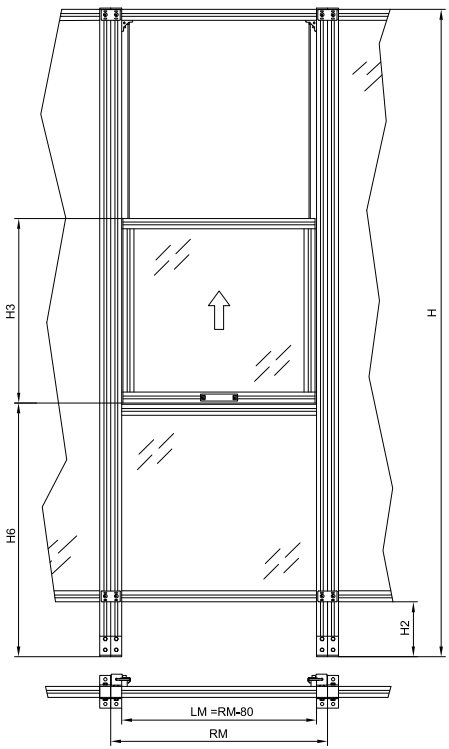

LM = clear dimension
RM = grid dimension

Simple Lifting Doors

... for the Partition Method

Lifting doors consist of a solid partition and a lifting element, which is balanced using steel cables that are connected to counterweights via idler pulleys. This lets you easily lift and lower the door manually. Pneumatic or electronic activators are available on request. Paneling is sold separate, do not forget it when ordering.

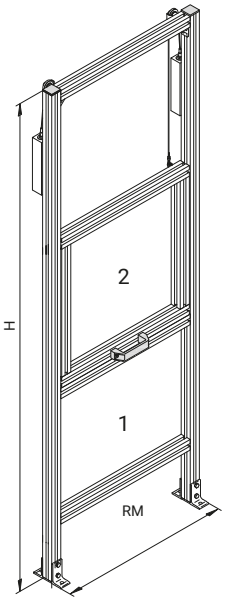

Simple lifting door
B69.62.001

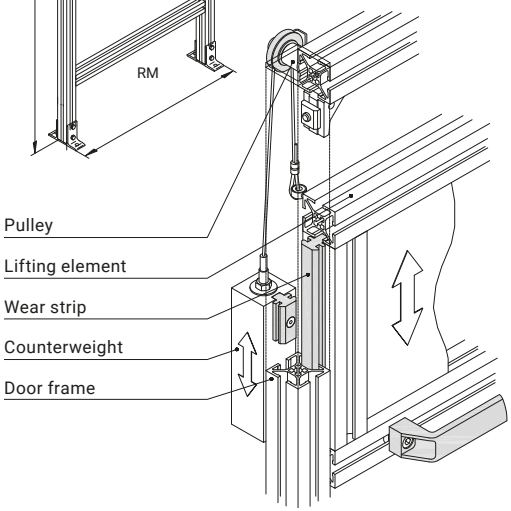

Information required for ordering

- RM, H, H2, H3, H6, Hub, panelling

Scissor Doors

... for the Partition Method

Scissor doors feature two lifting style doors, moving in opposing directions. The weigh balancing is provided by the other door. Pneumatic or electronic activators are available on request.

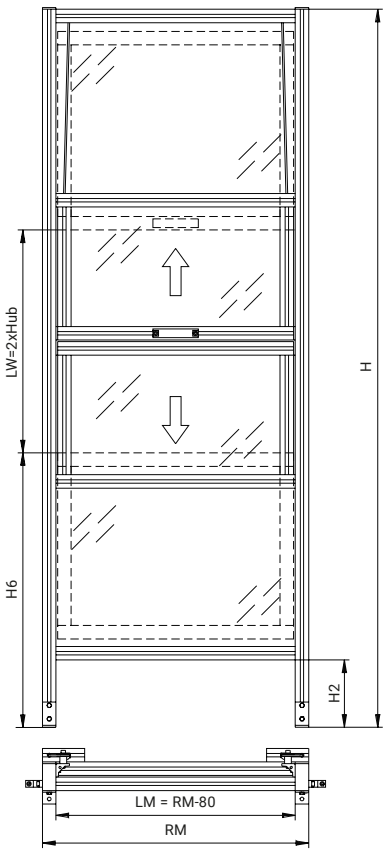

LM = clear dimension
RM = grid dimension

Assemblies without panelling (B...):

mk 2040.40 (40x40) and mk 2040.41 (40x80) profiles, connecting elements, support brackets, handle, wear strips, idler pulleys

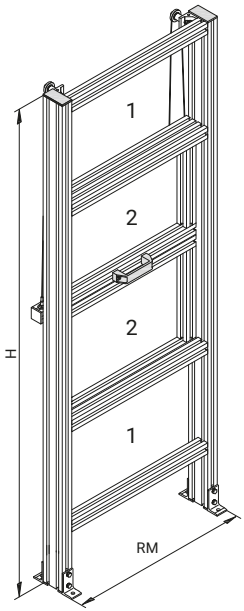

Scissor door
B69.62.002

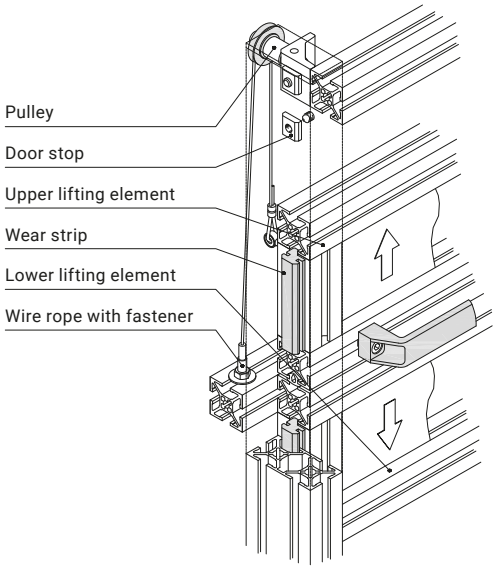

Information required for ordering

- RM, H, H2, LW, H6, panelling

Panelling starting on page 240
Captive fastening system on page 232

Fastening example

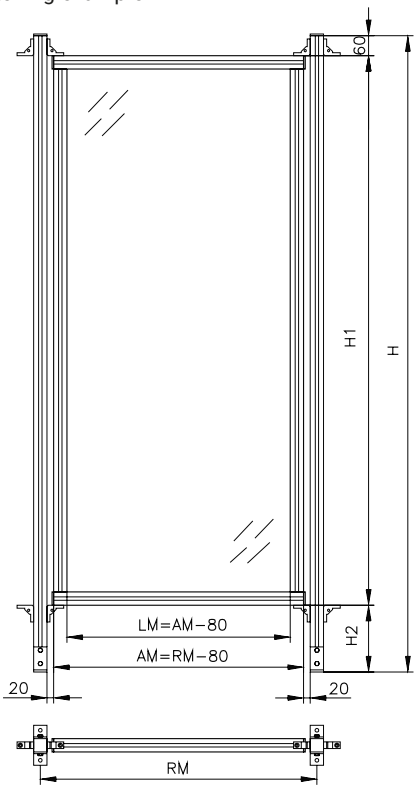

LM = clear dimension
AM = outer dimension
RM = grid dimension

Posts

... for the Pillar-Panel Solution

The pillar-panel solution features separate panel frames that are mounted between posts anchored to the floor. This allows you to easily remove individual partitions, and the captive fastening system allows you to do so in accordance with the Machinery Directive. The angle mounting method allows them to be installed at various angular degrees. The heights and grid dimensions can be adapted to customer-specific requirements.

Information required for panel frame orders

- RM (500, 750, 1000, 1250 as standard, also 1500 and 2000 mm with vertical brace)
- H (2060 as standard)
- H2 (180 mm as standard)
- H4 (optional for partitions with horizontal brace)
- Panelling

The panelling (e.g. polycarbonate) must be specified when ordering; otherwise the assemblies (B...) will be delivered without panelling.

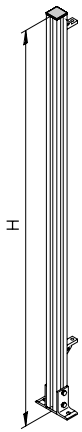

Post 1
B69.65.001 H ....

Post (without angle)
B69.65.000 H ....

Not pictured

Assemblies (B...):

mk 2040.31 (40x40) profile, angle B20/40, nuts with screws, end cap, support bracket

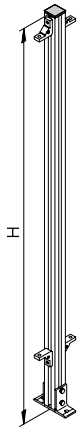

Post 2
B69.65.002 H ....

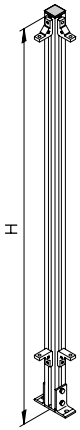

Post 3
B69.65.003 H ....

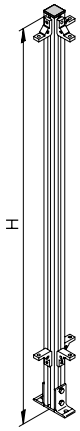

Post 4
B69.65.004 H ....

Panel Frames

... for the Pillar-Panel Solution

Outer dimension AM: RM - 80 mm
Standard height H1: 1820/1220 mm

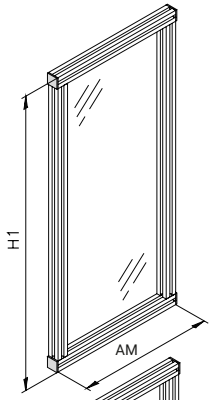

Simple panel frame
B69.50.001

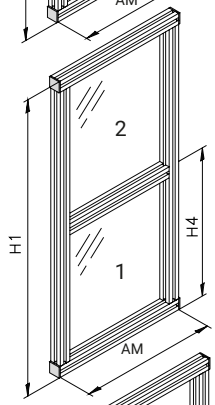

Panel frame
with horizontal brace
B69.50.002

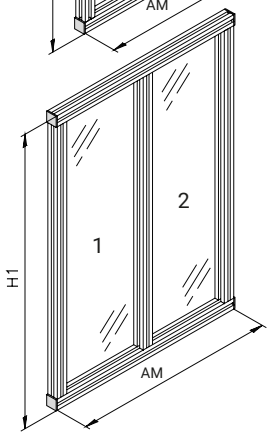

Panel frame
with vertical brace
B69.50.003

Assemblies without panelling (B...):

mk 2040.31 (40x40) profile, connecting elements, end caps

Captive Fastening System

... for the Pillar-Panel Solution

The captive fastening system allows you to quickly and conveniently install and remove partitions, for instance during maintenance work. In accordance with the Machinery Directive, the parts to be undone for removing the partition are designed so that they cannot be detached from the machine. The guarding features a robust construction, can be attached and detached using widely available tools. You can choose between two different versions based on your particular application.

25 | 40 | 50 | 60

Fastening example

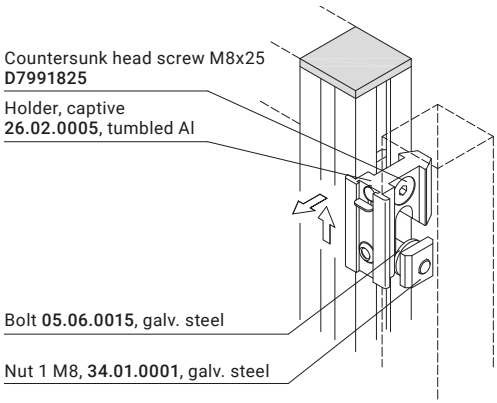

The following is required to mount a partition:

- If captive fastening is required: 2 x B46.00.243 (top) and 2 x B46.00.245 (bottom)
- If locking is not required: 4 x B46.00.245 (top and bottom)

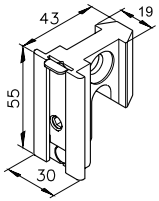

Holder, captive
B46.00.243

Complete, including bolts and fastening accessories

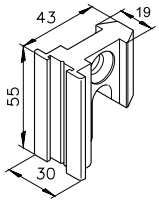

Holder, open
B46.00.245

Complete, including bolts and fastening accessories

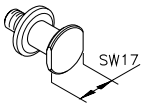

Bolt
05.06.0015

Galv. steel

Installing the Bolts and Holders

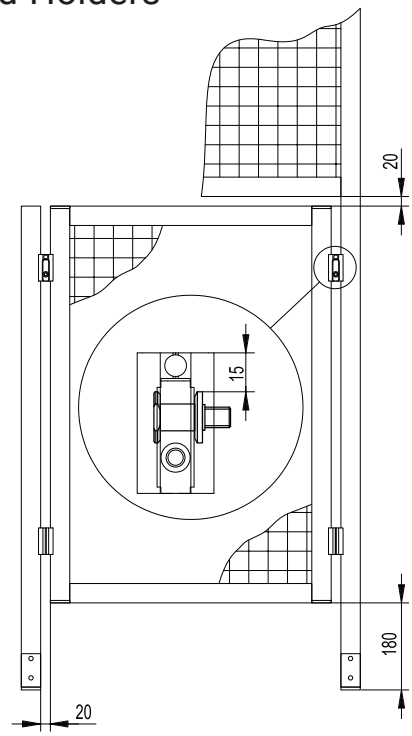

- Attach two (top) holders to both sides of the partition to be removed using a countersunk head screw and a nut. Make sure they are the same height.
- Screw two bolts into the profiles to the left and right of the partition to be removed using nut 1 M8. The distance from the top edge of the holder to the top edge of the bolt should be 15 mm.
- Attach two (bottom) holders as described above. Make sure they are the same height. Measure the distance between the top and bottom holders.
- Screw in two bolts as described above. Make sure the distances from top to bottom bolt are equal.
- If you need the partition to fall out when the guarding is unlocked (caution: risk of injury!), the bolts must be fastened to the partition and the holders fastened to the posts.

Installing the Partitions

- For installation, the cover sheet must be in the upper position and the threaded pin must be unscrewed from the opening in the sheet (against the retaining sheet). The red marking is now visible.

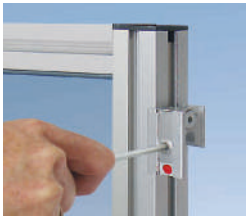

- Place the lower holder on the lower bolts. Tip the partition slightly to do so.

- Swivel the partition so that the upper holders lean against the upper bolts, then lift by about 20 mm and swivel to vertical.
- Lower the partition and allow all four holders to lock into the bolts.

- Tighten the threaded pins integrated in the holders to lock the partition. If using captive holders, the cover sheet falls to its lower position, thereby covering the red marking and exposing the green one. This way you can always tell whether the partition is secured.

- Perform the same procedure in reverse to remove the partition.

Windows, Single-leaf with Ball Latch

The ball latch ensures that the window can be reliably and securely locked in the profile frame. Safety interlocks should be used in openings that are critical for safety. Paneling is sold separate, do not forget it when ordering.

Panelling starting on page 240
Locks starting on page 262

Fastening example

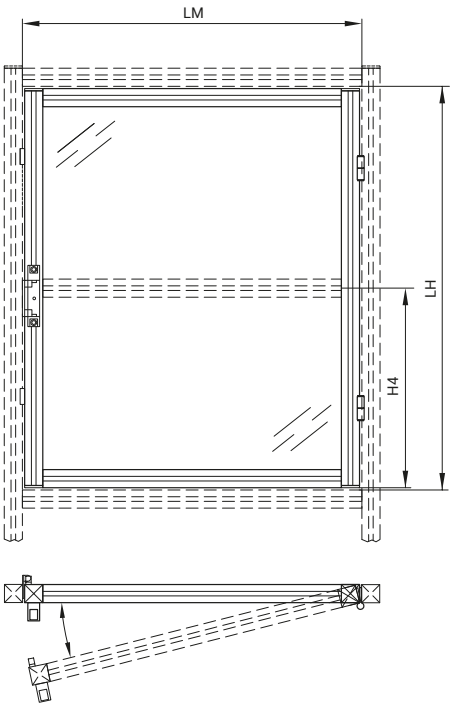

5 mm gap along the perimeter

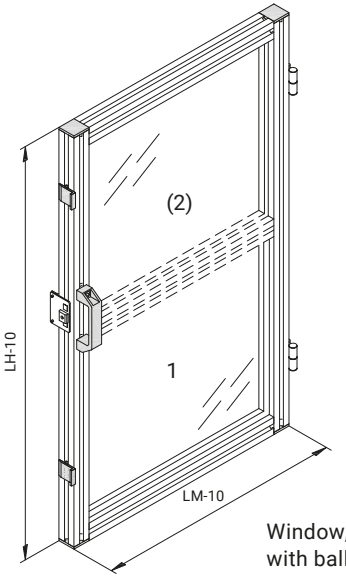

Window, single-leaf with ball latch
B68.07.001

Cross brace optional

Assemblies without panelling (B...):

mk 2040.31 (40x40) profile, connecting elements, handle, end caps, hinges, stops and ball latches

Information required for ordering

- LM, LH, H4 optional, panelling

Windows, Single-leaf with Cylinder Lock

The design with an internal lock (cylinder lock) ensures that the window locks in the profile frame. Paneling is sold separate, do not forget it when ordering.

Panelling starting on page 240
Locks starting on page 262

Fastening example

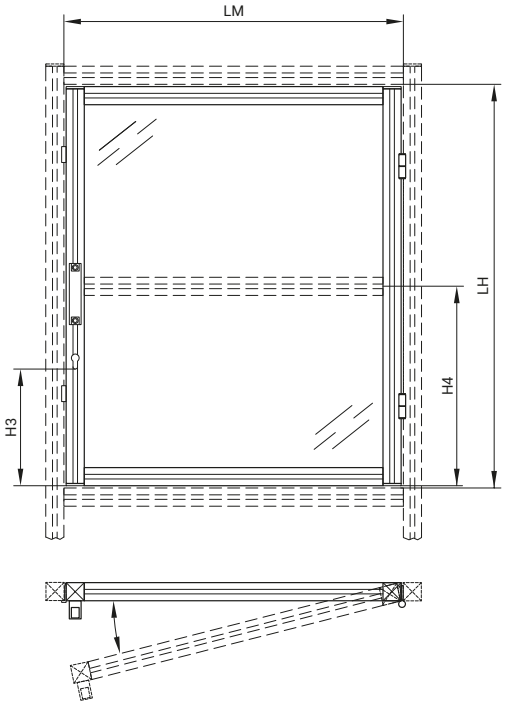

5 mm gap along the perimeter

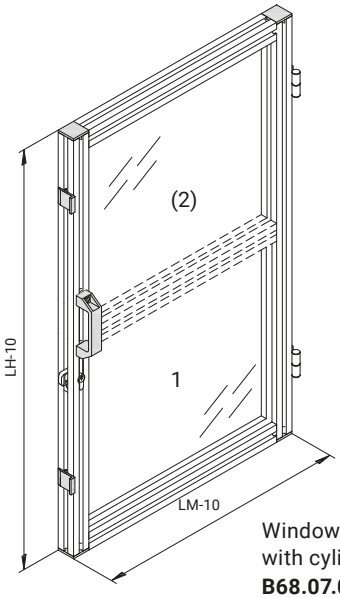

Window, single-leaf with cylinder lock
B68.07.002

Cross brace optional

Assemblies without panelling (B...):

mk 2040.31 (40x40) profile, connecting elements, handle, end caps, hinges, stops, cylinder lock

Information required for ordering

- LM, LH, H3, H4 optional, panelling

Windows, Double-leaf

The double-leaf window saves space compared to the single-leaf design. Paneling is sold separate, do not forget it when ordering.

Panelling starting on page 240
Locks starting on page 262

Fastening example

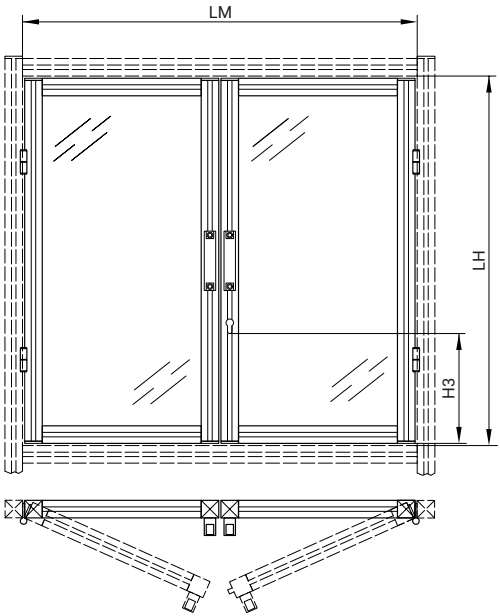

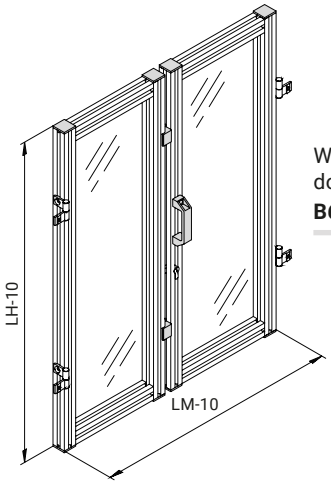

Window, double-leaf
B68.07.003

Max. clear dimension (LM) = 1200 mm
Max. clear height (LH) = 1800 mm

Assemblies without panelling (B...):

mk 2040.31 (40x40) profile, connecting elements, handle, end caps, hinges, lock

Information required for ordering

- LM, LH, H3, panelling

Sliding Windows

Sliding windows can be designed with two or three panes. The mk 2240 or mk 2241 profiles serve as the tracks and are compatible with Series 40 and Series 50 profiles. When the window is not completely closed, the sliding elements can be installed or removed as needed. When closed, they can be locked using a bolt lock.

Fastening example

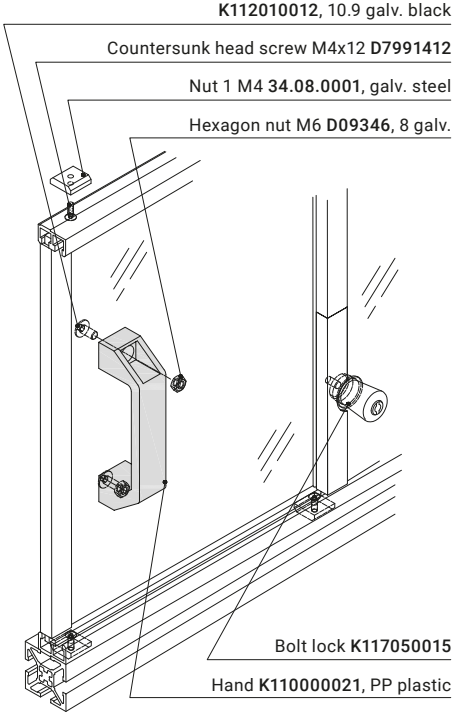

Max. clear dimension (LM) = 1200 mm
Max. clear height (LH) = 1000 mm

Assemblies (B...):

mk 2240, mk 2207 profiles, connecting elements, handle, stops, lock and panelling.

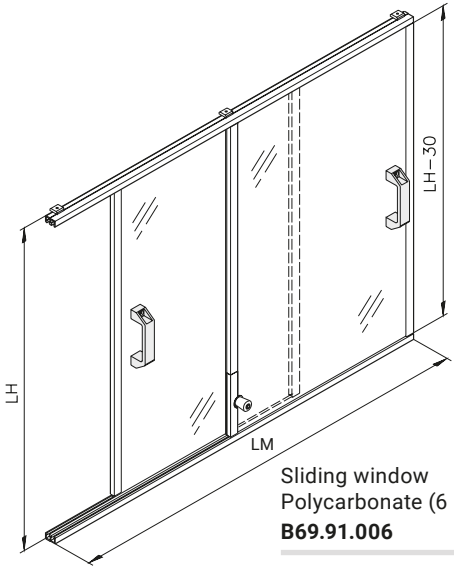

Sliding window
Polycarbonate (6 mm)
B69.91.006

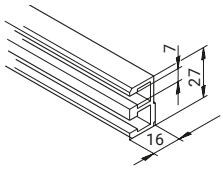

Profile mk 2240

0.47 kg/m

Stock length	**52.40.5100**
Cut	**52.40. ....**

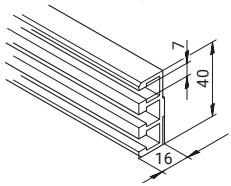

Profile mk 2241

0.67 kg/m

Stock length	**52.41.5100**
Cut	**52.41. ....**

Information required for ordering

- LM, LH

Folding Windows

Folding windows require a smaller swivel range than casement windows and are therefore a space-saving alternative. Paneling is sold separate, do not forget it when ordering.

Panelling
starting on page 240

Fastening example

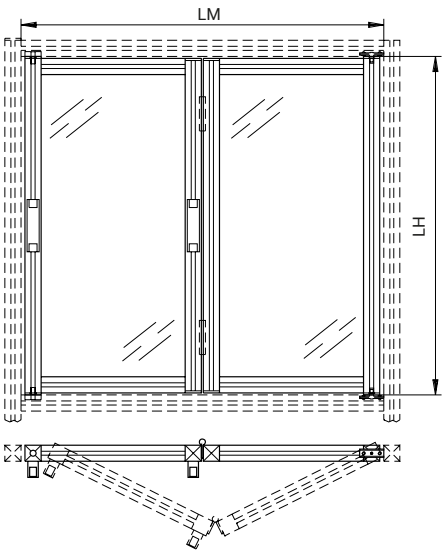

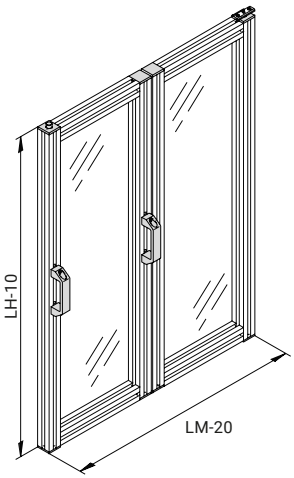

Folding window
Acrylic glass
B69.91.004

Folding window
Polycarbonate
B69.91.005

Information required for ordering

- LM, LH, panelling

Assemblies without panelling (B...):

mk 2040.31 (40x40) profile, connecting elements, handle, end caps, hinges

Max. LM = 1200 mm
Max. LH = 1000 mm

Notes

Panelling

Information about Panelling

The panelling listed below can be used in partitions, frames and both door and window elements. Fastening accessories for mounting the panelling in a profile frame are presented on the following pages. You will also find order information for the corresponding assemblies, which contain both the panelling and the appropriate fastening accessories. Other panelling, such as safety glass, is available on request.

Information required for ordering

- Whole sheet panelling: material item no.
- Cut panelling: item no. for cut section along with width, height and colour (clear, tinted grey or RAL colour)

If the panelling is to be mounting in a profile frame, the width and height will vary according to the mounting method and the panelling, as shown in the table below.

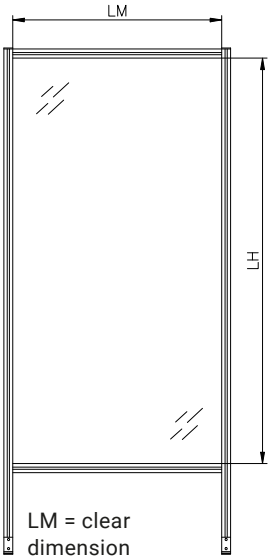

LM = clear dimension
LH = clear height

Cut Lengths by Fastening Method

Fastening method	Width	Height
... with holders	LM	LH
... with panel clamp	LM - 31 mm	LH - 31 mm
... with angles	LM	LH
... with clamping profile	LM + 10 mm	LH + 10 mm
... with fence clip	LM + 20 mm	LH + 20 mm
... with sealing strip	LM + 20 mm	LH + 20 mm

Closed Panels

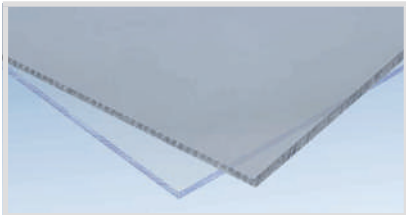

Clear or Grey-Tinted Polycarbonate

Polycarbonate (PC), also known under the brand name Makrolon, is an impact-resistant and rigid thermoplastic material. Its durability and sturdiness makes it the most used type of transparent panelling.

Material item no.	Size [mm]	Thickness [mm]	Weight [kg/m²]	Cut item no.
Clear				
K01B211004	2050x3050	4	4.80	50.15.6009
K01B211005	2050x3050	5	6.00	50.15.6002
K01B211006	2050x3050	6	7.20	50.15.6003
Tinted grey				
K01B231004	2050x3050	4	5.50	50.15.6009
K01B231005	2050x3050	5	7.30	50.15.6002

Clear Acrylic Glass

Acrylic glass (PMMA) is a thermoplastic material, also known under the brand name Plexiglas. It exhibits high strength, hardness and transparency. It is more resistant to breakage than traditional glass, but more sensitive to breakage and impacts than polycarbonate.

Material item no.	Size [mm]	Thickness [mm]	Weight [kg/m²]	Cut item no.
K01D211004	2050x3050	4	4.76	50.15.6014
K01D211005	2050x3050	5	5.96	50.15.6000
K01D211006	2050x3050	6	7.14	50.15.6001

Clear PETG

PETG is a modified, transparent PET plastic that exhibits higher impact resistance than acrylic glass and is easier to work with. PETG offers better optical properties and higher chemical resistance than polycarbonate.

Material item no.	Size [mm]	Thickness [mm]	Weight [kg/m²]	Cut item no.
K01P211005	2050x3050	5	6.35	50.15.6019
K01P211006	2050x3050	6	7.62	50.15.6017

Closed Panels

Silver Anodised Alucobond®

Alucobond® plates consist of two silver-anodised aluminium covering sheets with a black plastic core. This type of panelling provides slight damping and an attractive design.

Material item no.	Size [mm]	Thickness [mm]	Weight [kg/m²]	Cut item no.
K00316223004	1500x3000	4	5.50	50.15.4001
K00316223006	1500x3000	6	7.30	50.15.4002

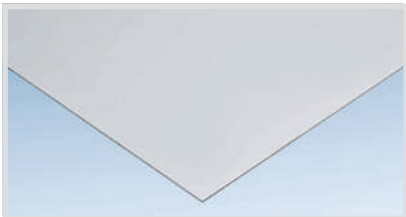

Silver Anodised Aluminium Sheet

Silver anodised aluminium sheet is easy to machine and provides an attractive look that matches the aluminium profiles. It is easy to clean and resists corrosion.

Material item no.	Size [mm]	Thickness [mm]	Weight [kg/m²]	Cut item no.
K00305321150	1000x2000	1.5	4.05	07.30.
K00305321200	1000x2000	2	5.40	07.33.
K00305321250	1000x2000	2.5	6.75	07.36.

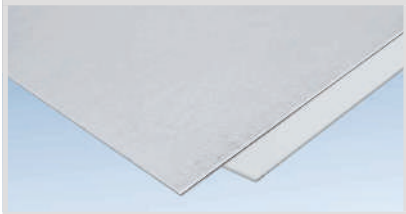

Galvanised or Painted Steel

Steel is available in a galvanised or painted design. and all cut sections are delivered deburred. Please note that the cut edges are not galvanised. Please specify the RAL colour when ordering painted steel.

Material item no.	Size [mm]	Thickness [mm]	Weight [kg/m²]	Cut item no.
Galvanised				
K00112121150	1000x2000	1.5	10.65	07.28.
Painted				
K00112131150	1000x2000	1.5	10.65	07.28.

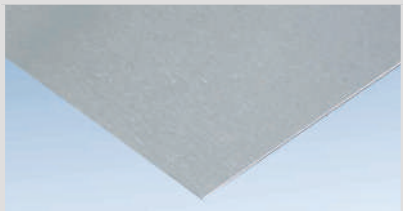

Ground Stainless Steel Sheet

Ground V2A stainless steel sheet is resistant to corrosion and suitable for use in food production applications.

Material item no.	Size [mm]	Thickness [mm]	Weight [kg/m²]	Cut item no.
K00205121150	1000x2000	1.5	11.85	07.29.
K00205121200	1000x2000	2	15.80	07.32.

Duet Chequer Sheet

Aluminium chequer sheets with a slip-resistant Duet chequer pattern are used primarily as stepping surfaces for platforms and steps.

Material item no.	Size [mm]	Thickness [mm]	Weight [kg/m²]	Cut item no.
K0030641125	1000x2000	2.5/4	7.55	07.21.1125
K0030641135	1000x2000	3.5/5	10.25	07.21.1135
K0030641150	1000x2000	5/6.5	14.30	07.21.1150

Grid Panels

Aluminium or Galvanised Steel Wire Mesh

Wire mesh is suitable for guarding intended to separate areas and is easy to work with. The wire is 4 mm thick, and the mesh size is 40 x 40 mm.

Material item no.	Size [mm]	Thickness [mm]	Weight [kg/m²]	Cut item no.
Aluminium				
K00315121.40	1000x2000	4	1.63	24.00.
K00315122.40	2000x3000	4	1.63	24.00.
Galvanised steel				
K00128221.40	1000x2000	4	4.70	24.02.
K00128222.40	2000x3000	4	4.70	24.02.

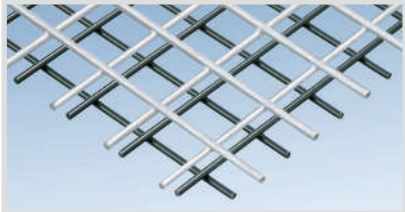

Welded Steel Grids, Powder-Coated or Galvanised

Welded grids are suitable for guarding intended to separate areas. They are sturdy, easy to work with and exhibit high load capacity. The wire is 4 mm thick, and the mesh size is 40 x 40 mm. You can select from galvanised steel and black powder-coated steel versions.

Material item no.	Size [mm]	Thickness [mm]	Weight [kg/m²]	Cut item no.
Black powder coated				
K00128321.40	1000x2000	4	4.80	24.05.
K00128323.40	1250x2000	4	4.80	24.05.
K00128324.40	1500x2000	4	4.80	24.05.
Galvanised				
K00128421.40	1000x2000	4	4.80	24.06.

Perforated Sheets

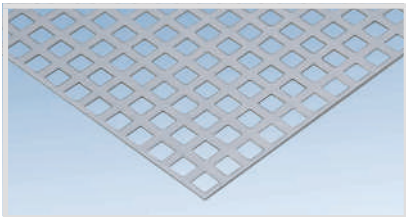

Square Hole Perforated Sheets

Galvanised steel perforated sheets with square holes serve as a protective guard while also ensuring good ventilation. They can also be used as grates for draining liquids or for hanging tools.
10 x 10 mm square holes, 15 mm spacing (Qg 10-15).

Material item no.	Size [mm]	Thickness [mm]	Weight [kg/m²]	Cut item no.
Galvanised steel				
K0011312121510	1250x2500	1.5	13.33	07.19.2110
K0011312122010	1250x2500	2	17.78	07.19.2210
Stainless steel				
K002061211150	1000x2000	1.5	13.33	07.45.0000

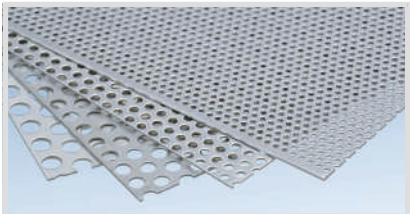

Galvanised Round Hole Perforated Sheet

Galvanised steel perforated sheets with round holes in various diameters and offset rows serve as protective guards while also ensuring good ventilation. They can also be used as grates for draining liquids or for hanging tools.

Material item no.	Ro* [mm]	Size [mm]	Thickn. [mm]	Weight [kg/m²]	Cut item no.
K0011311121503	3-5	1250x2500	1.5	16.60	07.19.1103
K0011311121505	5-8	1250x2500	1.5	15.50	07.19.1105
K0011311121508	8-12	1250x2500	1.5	14.33	07.19.1108
K0011311121510	10-15	1250x2500	1.5	14.33	07.19.1110
K0011311122003	3-5	1250x2500	2	21.55	07.19.1203
K0011311122005	5-8	1250x2500	2	20.66	07.19.1205
K0011311122008	8-12	1250x2500	2	19.10	07.19.1208
K0011311122010	10-15	1250x2500	2	19.10	07.19.1210

* Offset round holes (Ro) = hole ø - spacing

Panelling

Edge Profiles

Edge profiles provide seamless closure for panelling. The protect against sharp cut edges and increase stability. They allow you to create simple contours, as shown at left. Simply place the edge profiles on the panelling and the teeth will fix them in place.

Material: Anodised aluminium

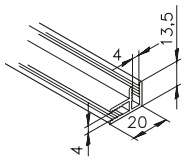

Profile mk 2210

0.25 kg/m

Stock length	**52.10.6000**
Cut	**52.10. ....**

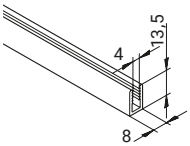

Profile mk 2206

0.14 kg/m

Stock length	**52.06.6000**
Cut	**52.06. ....**

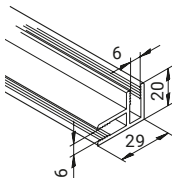

Profile mk 2211

0.47 kg/m

Stock length	**52.11.6000**
Cut	**52.11. ....**

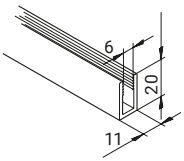

Profile mk 2207

0.27 kg/m

Stock length	**52.07.6000**
Cut	**52.07. ....**

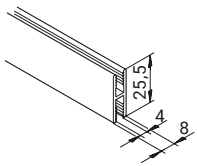

Profile mk 2214

0.25 kg/m

Stock length	**52.14.6000**
Cut	**52.14. ....**

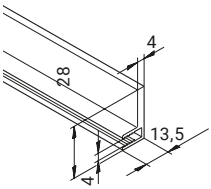

Profile mk 2203

0.35 kg/m

Stock length	**52.03.6000**
Cut	**52.03. ....**

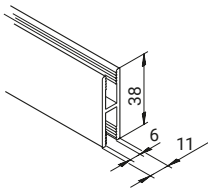

Profile mk 2215

0.47 kg/m

Stock length	**52.15.6000**
Cut	**52.15. ....**

Notes

Panelling with Fastening Accessories

... with Holder

The holder for fastening panelling into existing structures in accordance with the Machinery Directive. The holder is available in two designs: with a simple flanged button-head screw, or as a captive connection with an undercut flanged button-head screw and a ribbed washer. The holder is closed by snapping on the cover, and the nut is secured so that it cannot be slid out.

Material: Fibre-reinforced plastic

Fastening example

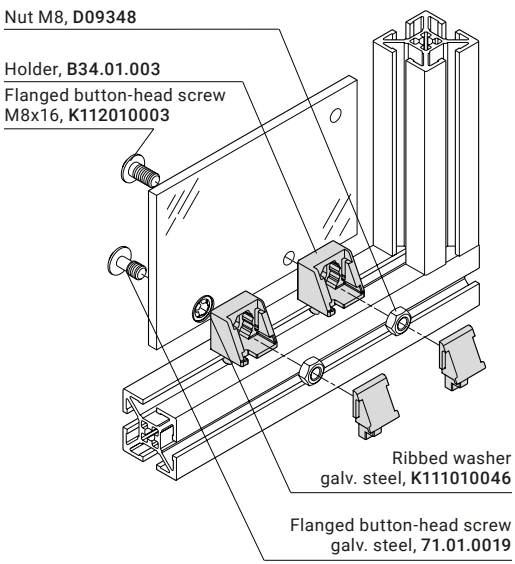

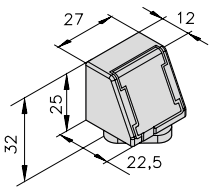

25 | 40 | 50 | 60

Holder with cover

B34.01.003

without fastening accessories

B34.01.004

with fastening accessories

B34.01.004A2

with VA fastening accessories

B34.01.005

with captive fastening accessories

B34.01.005A2

with captive VA fastening accessories

Polycarbonate

Clear or tinted grey

5 mm	**B69.90.206**	**LM ....**	**LH ....**
6 mm	**B69.90.207**	**LM ....**	**LH ....**

LM and LH represent the clear dimensions of the profile frame.

Panelling requires ø 9 mm bores at a distance of 10 to 15 mm from the profile frame.

Panelling with Fastening Accessories

... with Panel Clamp

Panel clamps are used to fasten unmachined panelling from 5 to 8 mm in thickness. There is a gap of 15 mm all around between the profile frame and panelling. Suitable for retrofitting in closed profile frames.

Material: Fibre-reinforced plastic

Fastening example

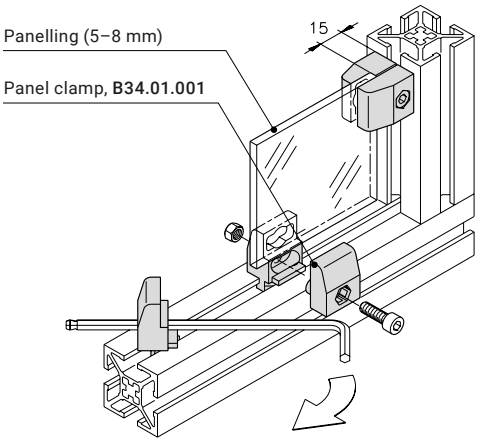

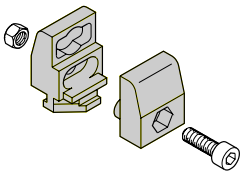

25 **40** 50 60

Panel clamp 40
B34.01.001

25 40 **50** 60

Panel clamp 50
B34.01.002

Acrylic glass Clear			
5 mm	**B69.90.103**	**LM ....**	**LH ....**
6 mm	**B69.90.104**	**LM ....**	**LH ....**

Polycarbonate Clear or tinted grey			
5 mm	**B69.90.204**	**LM ....**	**LH ....**
6 mm	**B69.90.205**	**LM ....**	**LH ....**

LM and LH represent the clear dimensions of the profile frame.

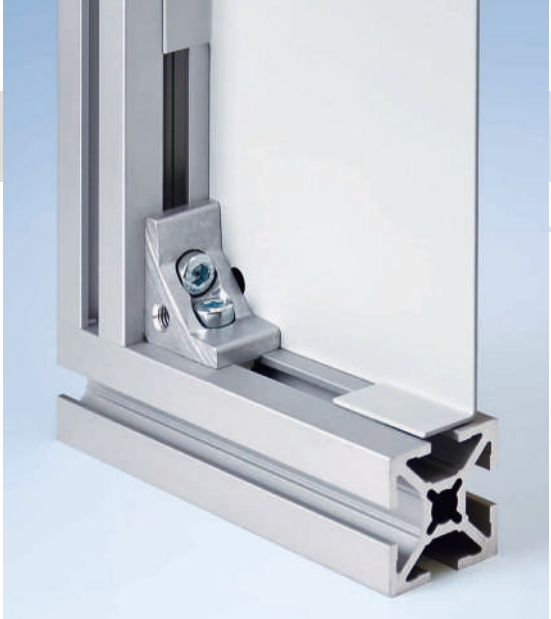

Panelling with Fastening Accessories

... with Angle

Fasteners for attaching steel panelling. Suitable for retrofitting in closed profile frames. Threads for inserting panelling are tapped into the angles' lateral bore. Angles E25 and E25s are the preferred angles. A holder can be used to support larger side lengths. Please specify the RAL colour when ordering painted steel.

Material: Tumbled aluminium

Fastening example

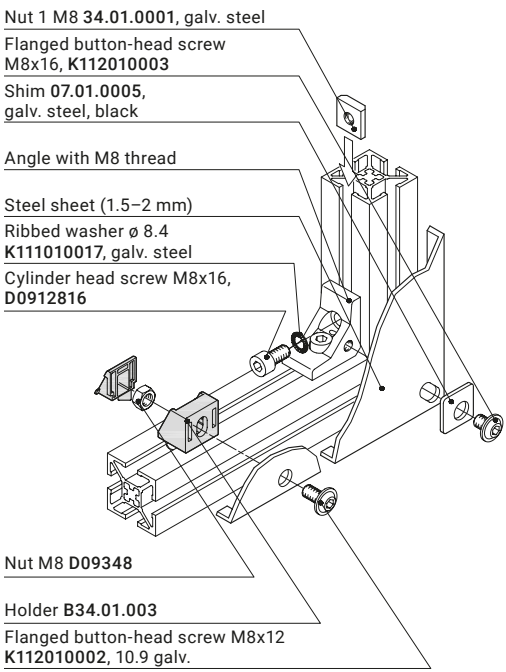

LM and LH represent the clear dimensions of the profile frame.

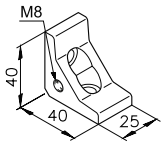

25 | 40 | 50 | 60

Angle, E25, M8
82.40.0721

with M8 thread

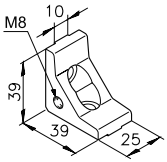

25 | 40 | 50 | 60

Angle, E25s, M8
82.40.0761

with M8 thread

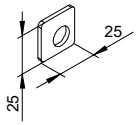

Shim
07.01.0005

Galv. steel, black

Steel sheet

Galvanised or painted

1.5 mm	**B69.90.310**	**LM > 300**	**LH < 300**
1.5 mm	**B69.90.311**	**LM ....**	**LH ....**
For side lengths up to 1200 mm			
2 mm	**B69.90.312**	**LM ....**	**LH ....**
With additional B34.01.003 holders for side lengths over 1200 mm			

Panelling with Fastening Accessories

... with Clamping Profile

The mk 2040.60 profile is used to fasten wire mesh in a 10 mm T-slot. It is installed when assembling the profile frame. An additional screw is needed to secure the profile when the side is longer than 1500 mm; see the fastening example. The spacer part eliminates the need for time-consuming mitre cuts.

Material: Anodised aluminium

Fastening example

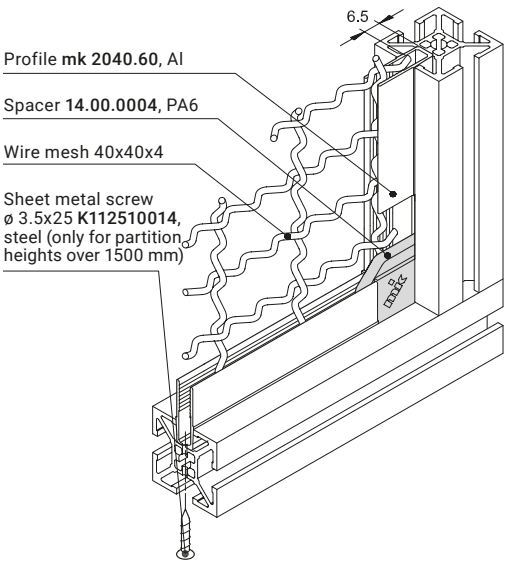

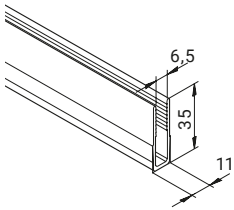

Profile mk 2040.60

0.30 kg/m

Stock length	**54.60.6100**
Cut	**54.60. ....**

Spacer part
14.00.0004

PA6 plastic

Wire mesh
Aluminium

40x40x4 mm	**B69.90.001**	**LM ....**	**LH ....**

Wire mesh
Galvanised steel

40x40x4 mm	**B69.90.002**	**LM ....**	**LH ....**

LM and LH represent the clear dimensions of the profile frame.

Panelling

Panelling with Fastening Accessories

... with Fence Clip

Fence clips can be used to fasten welded grids easily, quickly and cheaply. The fence clip is simply hammered into the profile slot, which fixes the protective grate in the frame. The terminal is designed for 4 mm thick welded grids.

Material: ABS plastic

7

Fastening example

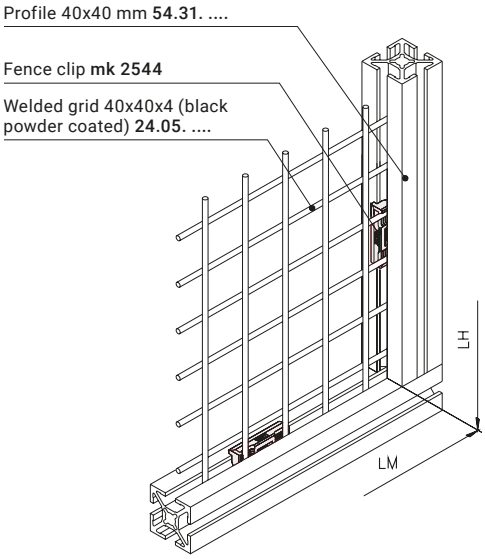

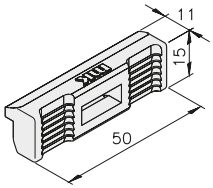

25	40	50	60

Fence clip
mk 2544

Welded grid Black powder coated			
40x40x4 mm	**24.05.**	**LM ....**	**LH ....**
complete with fence clips	**B69.90.003**	**LM ....**	**LH ....**

Welded grid Galvanised steel*			
40x40x4 mm	**24.06.**	**LM ....**	**LH ....**
complete with fence clips	**B69.90.005**	**LM ....**	**LH ....**

*Special RAL paint colours optional

LM and LH represent the clear dimensions of the profile frame.

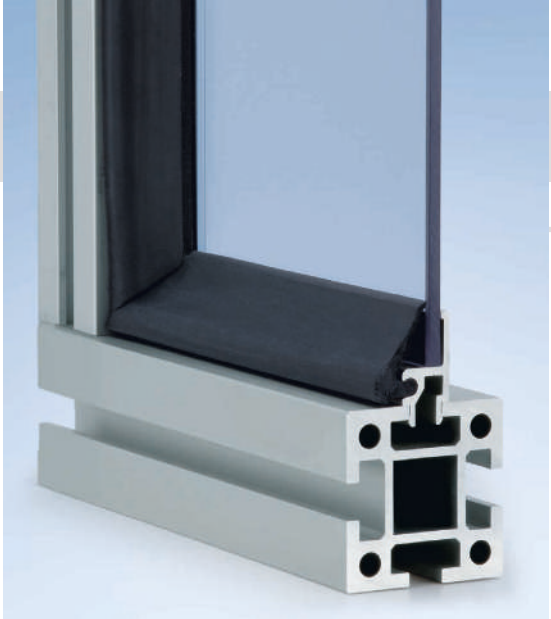

Panelling with Fastening Accessories

... with Sealing Strip

The combination of mk 2220 profile with mk 3034 sealing strip is a universal holder for panelling from 2 to 8 mm in thickness. All Series 40 and 50 construction profiles are suitable for use as the mounting profile. Not permitted for guarding intended to separate areas. **Not permitted for guarding intended to separate areas.**

Information required for ordering

- Item number
- Length in mm

7

Fastening example

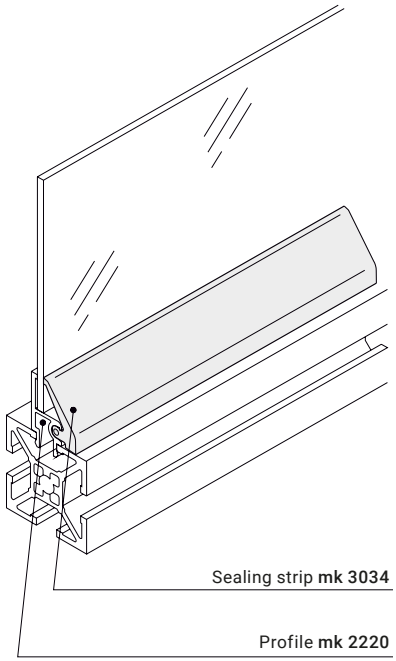

LM and LH represent the clear dimensions of the profile frame.

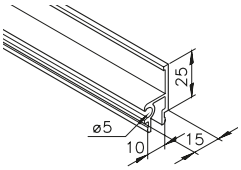

Profile mk 2220

0.32 kg/m

Stock length	**52.20.6100**
Cut	**52.20. ....**

Anodised aluminium

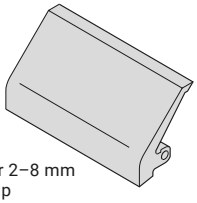

for 2–8 mm gap

25 | 40 | 50 | 60

Sealing strip **mk 3034**

Black EPDM rubber

Polycarbonate
Clear or tinted grey

4 mm	**B69.90.701**	**LM ....**	**LH ....**
6 mm	**B69.90.702**	**LM ....**	**LH ....**

Acrylic glass
Clear

5 mm	**B69.90.710**	**LM ....**	**LH ....**
6 mm	**B69.90.711**	**LM ....**	**LH ....**

Steel sheet
Galvanised or painted

2 mm	**B69.90.720**	**LM ....**	**LH ....**

Panelling with Fastening Accessories

... with Sealing Strip

Sealing strips are used to fix panelling from 1.5 to 6.5 mm thick in the T-slot. They seal the T-slot to produce a seamless transition. Sealing strips can also be used in cleanroom conditions.

Information required for ordering

- Item number
- Length in mm

Fastening example

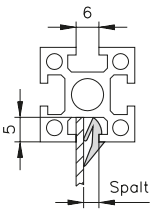

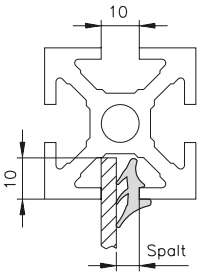

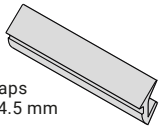

for gaps 3.5–4.5 mm

25 40 50 60

Sealing strip
mk 3027 black

TPE-V rubber

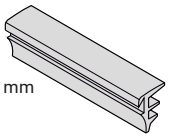

for 4-6 mm gap

25 40 50 60

Sealing strip
mk 3020 black

TPE-V rubber

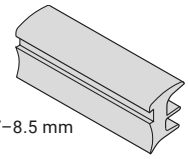

for 7–8.5 mm gap

25 40 50 60

Sealing strip
mk 3021 black

TPE-V rubber

Alucobond® Silver anodised			
4 mm	**B69.90.501**	**LM ....**	**LH ....**
6 mm	**B69.90.502**	**LM ....**	**LH ....**
Acrylic glass Clear			
5 mm	**B69.90.101**	**LM ....**	**LH ....**
6 mm	**B69.90.102**	**LM ....**	**LH ....**
Polycarbonate Clear or tinted grey			
4 mm	**B69.90.201**	**LM ....**	**LH ....**
5 mm	**B69.90.202**	**LM ....**	**LH ....**
6 mm	**B69.90.203**	**LM ....**	**LH ....**

Panelling with Fastening Accessories

... with Sealing Strip

Sealing strip is suitable for holding panelling from 4 to 6 mm in thickness. During mounting, the sealing strip together with the panelling is pressed into the slot of the profile. Due to the geometry, the side flanks are pressed against the panelling. This produces a seamless transition.

Material: PP plastic

Fastening example

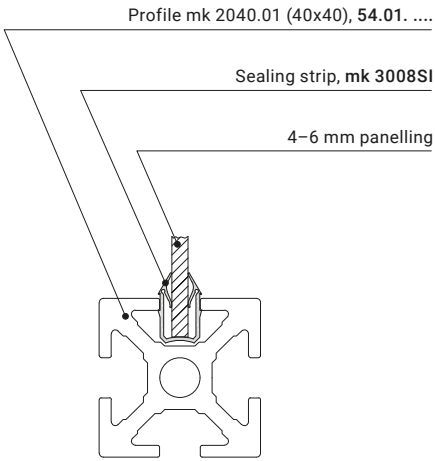

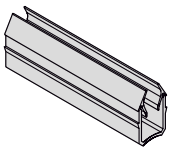

for 4–6 mm panelling

25 | 40 | 50 | 60

Sealing strip
mk 3008

Black

mk 3008SI

Silver grey

2000 mm stock length

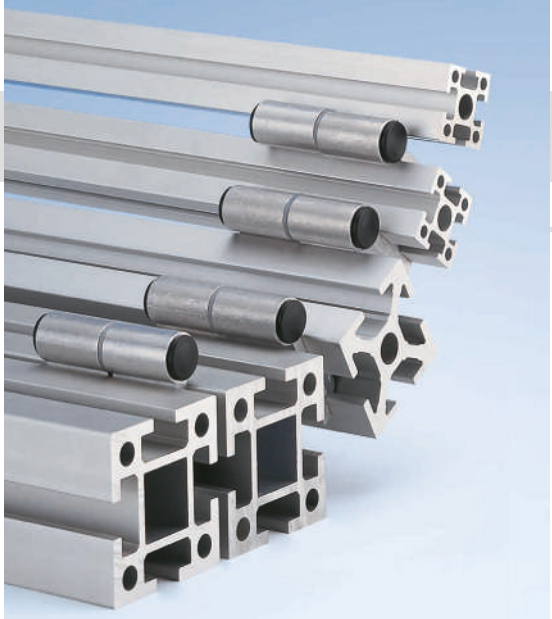

Door and Window Components

Hinges

The various hinge leaves allow you to combine profiles from different series. You can, for example, install a door built from Series 25 profiles into a structure built from Series 50. You can use two-leaf or three-leaf hinges, depending on whether you want to be able to unhinge the door later. A slide bushing can be inserted in the three-leaf hinges to allow for frequent opening even under high loads.

Material: Tumbled aluminium

Example of installation position A

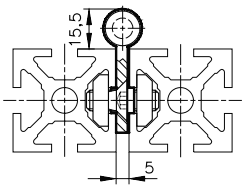

Example of installation position B

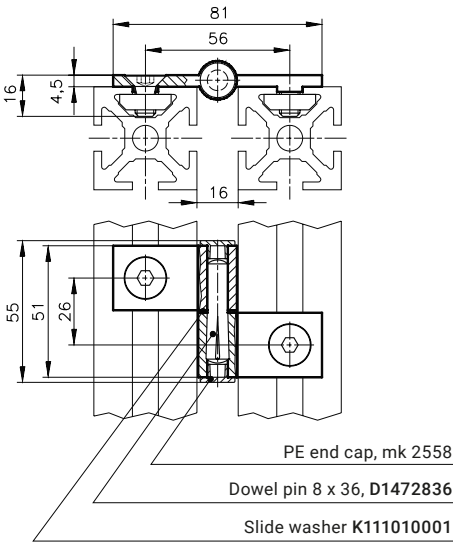

Hinge combination 25-1/25-1

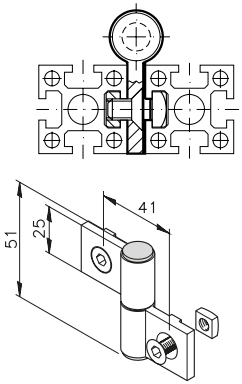

25 40 50 60

Hinge
25-1/25-1
B46.01.012*

Hinge combination 25-1/40-1

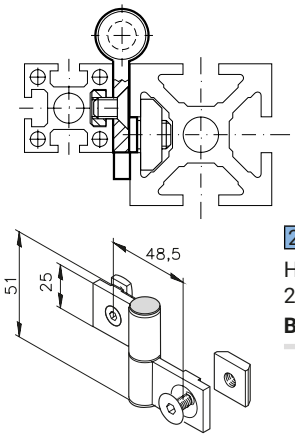

25 40 50 60

Hinge
25-1/40-1
B46.01.013*

*With fastening accessories

Hinge combination 40-1/40-1
and 40-1/40-7/40-1

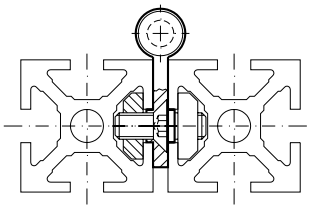

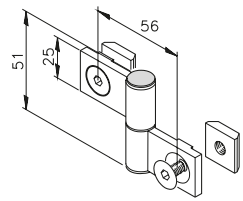

25 **40** 50 60

Hinge
40-1/40-1
B46.01.010*

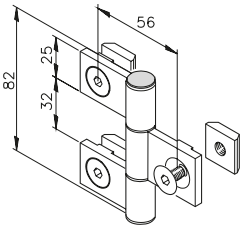

25 **40** 50 60

Hinge
40-1/40-7/40-1
B46.01.030*

Hinge combination 50-1/50-1
and 50-2/50-2

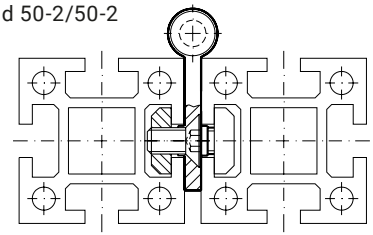

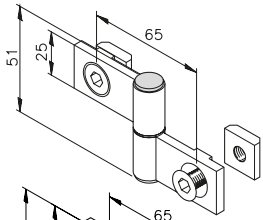

25 40 **50** 60

Hinge
50-1/50-1
B46.01.001*

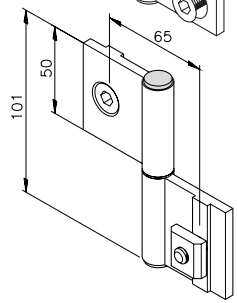

25 40 **50** 60

Hinge
50-2/50-2
B46.01.002*

Hinge combination 40-1/50-1

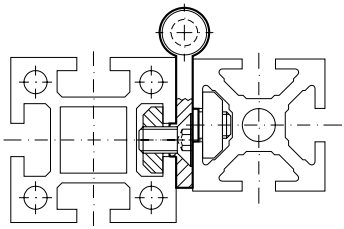

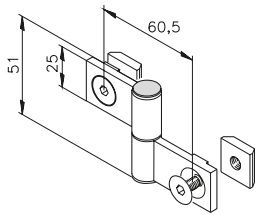

25 **40** **50** 60

Hinge
40-1/50-1
B46.01.011*

Hinge combination 50-1/60-1

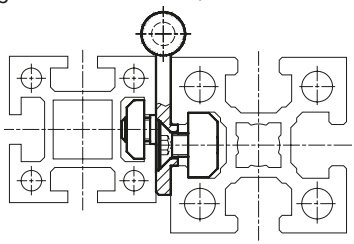

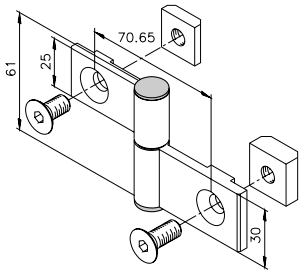

25 40 **50** **60**

Hinge
50-1/60-1
B46.01.064*

*With fastening accessories

Hinges

Hinge combination 60-1/60-1
and 60-1/60-7/60-1

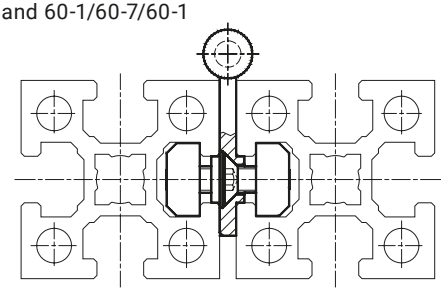

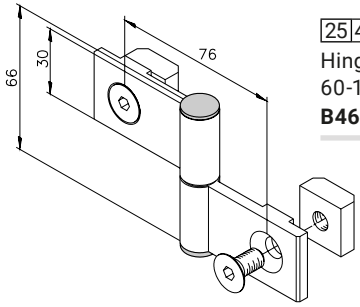

25 40 50 **60**
Hinge
60-1/60-1
B46.01.058*

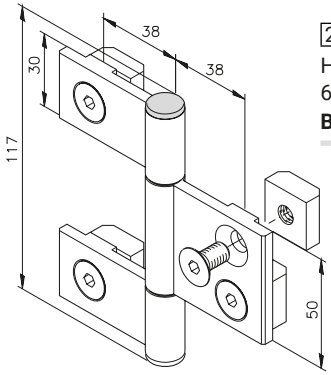

25 40 50 **60**
Hinge
60-1/60-2/60-1
B46.01.059*

Hinge combination 25-1/50-1

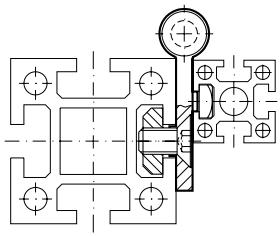

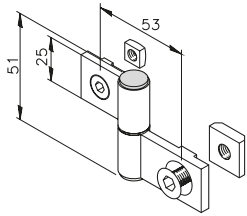

25 40 50 60
Hinge
25-1/50-1
B46.01.014*

Hinge combination 40-1/60-1

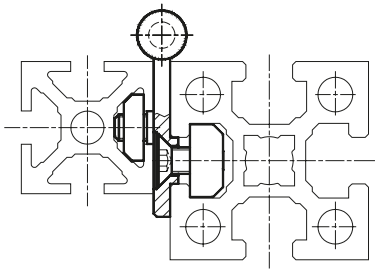

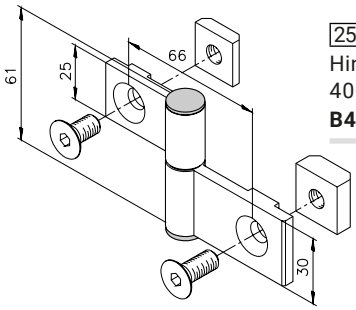

25 **40** 50 60
Hinge
40-1/60-1
B46.01.063*

*With fastening accessories

Hinges

The following hinges have been designed exclusively for mounting on Series 25 profiles for small doors and flaps.

Material hinge leaf: black powder-coated die-cast zinc

25 40 50 60

Fastening example

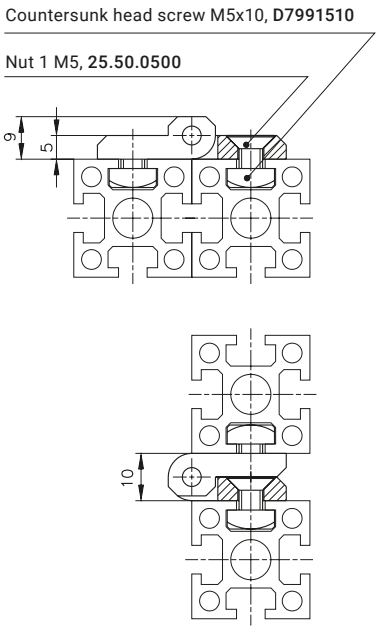

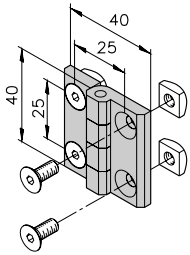

Hinge series 25
B46.01.033*

*With fastening accessories

Hinges for Panelling

The following hinges can be used to attach panelling directly without an additional frame structure. The hinge can be used for both right-hand and left-hand connections and reaches an opening angle of 180°.

Material: Tumbled aluminium

Fastening example

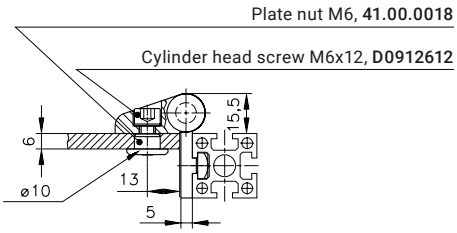

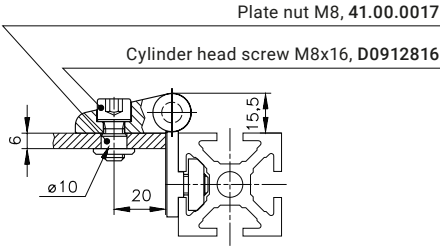

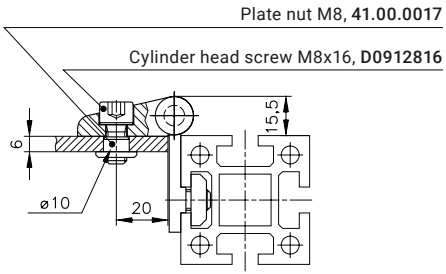

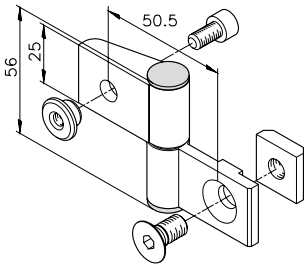

25 | **40** | 50 | 60

Hinge
40-1/40-3
B46.01.050*

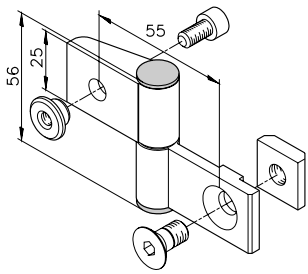

25 | 40 | **50** | 60

Hinge
50-1/40-3
B46.01.055*

*With fastening accessories

Ball Latch

The ball latch is a low-wear, quick-release fastener. It locks by clicking into place between the spring-loaded balls.

Material: Brass

25 | 40 | 50 | 60

Fastening example

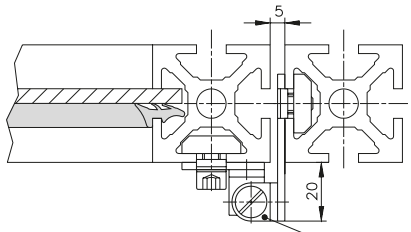

Ball latch for 5 mm door gap,
B68.02.101

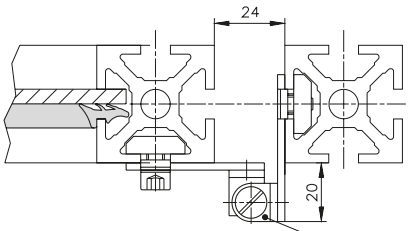

Ball latch for 24 mm door gap,
B68.02.102

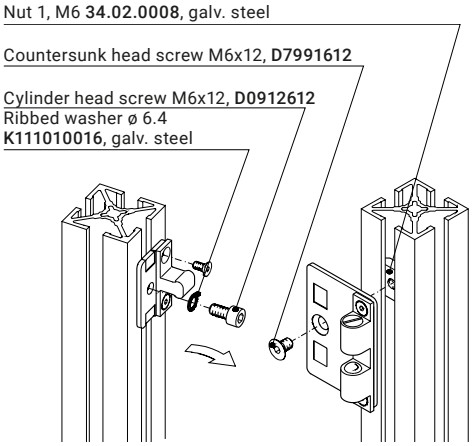

Ball latch for 5 mm door gap
B68.02.101*

Ball latch for 24 mm door gap
B68.02.102*

Door stop

Material: PE-1000 plastic

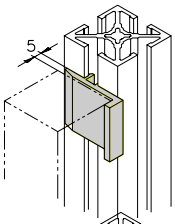

Stop profile
for swing doors
22.90.0035

for 5 mm door gap

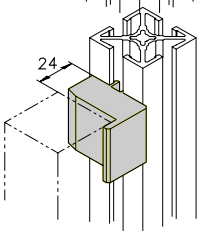

Stop profile
for swing doors
22.92.0035

for 24 mm door gap

*With fastening accessories

Fastening example

Swing door, DIN right

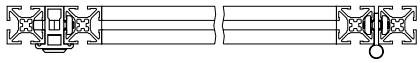

Swing door, DIN left

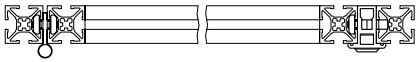

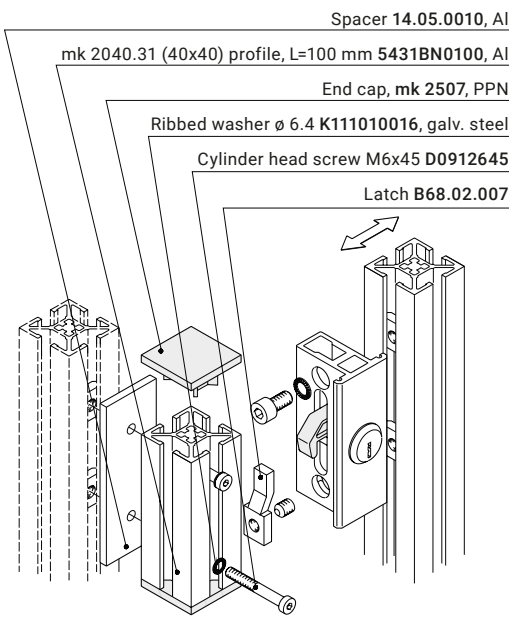

External Locks

External locks are attached to the side of the profile. The distance between the frame and door must be 24 mm. They can be used for sliding doors and hinged doors.

Material: Tumbled aluminium

25 **40** 50 60

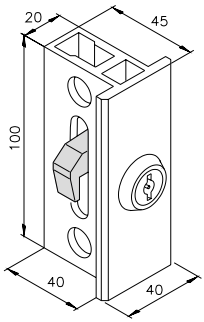

External double-bit lock DIN right
B68.02.017

DIN left
B68.02.018

Key
K117050006

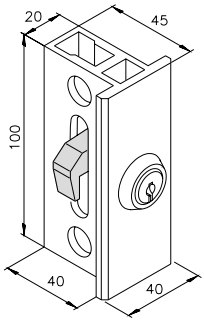

External cylinder lock DIN right
B68.02.019

DIN left
B68.02.020

incl. key

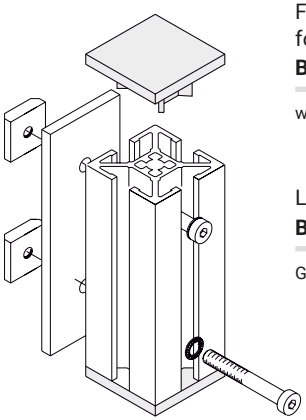

Frame extender for sliding door
B68.06.005

with latch

Latch
B68.02.007

Galv. steel

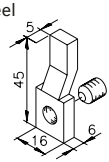

Internal Locks

Internal locks are cylinder locks that are installed directly in the door profile. The distance between the frame and door must be 5 mm. For left-hand and right-hand closing.

Drilling pattern for cylinder lock

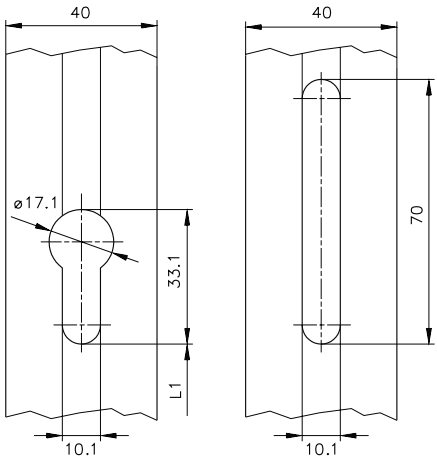

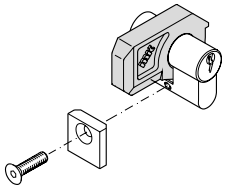

25 | 40 | 50 | 60

Cylinder lock, complete
B68.02.051

L = 42 mm

incl. key

Removal of panelling material for the cylinder lock

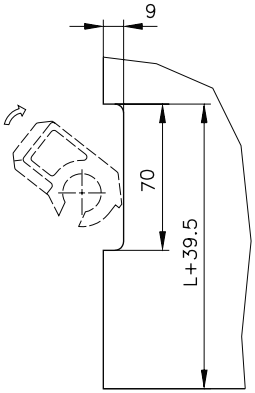

Profile service for mk 2040.01 (40x40) profile
5401BC ....

Profile service for mk 2040.40 (40x40) profile
5440BC ....

Profile service for mk 2040.31 (40x40) profile
5431BI ....

Please specify L1 when ordering

Tower Bolts

For locking swing doors at the top frame profile and/or at the floor. A guide angle must be attached to the top frame profile, while a bolt strike plate is used on the floor. When fastening to the floor, you must form-tap an M8 thread into the mk 2040.31 (40x40) vertical strut. 360 mm standard length.

Material: Tumbled aluminium

25 | **40** | 50 | 60

Fastening example

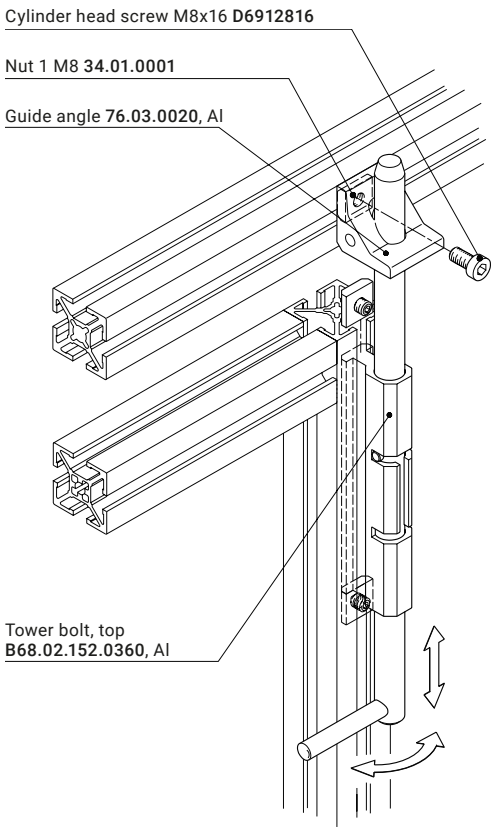

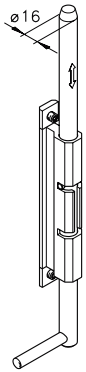

Tower bolt, top
B68.02.152.0360

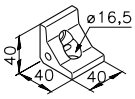

Guide angle
76.03.0020

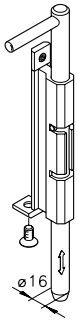

Tower bolt, bottom
B68.02.151.0360

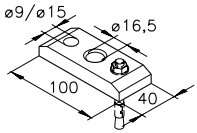

Plate for tower bolt
76.03.0018

Anchor

Roller Unit

This sliding mechanism is a cost-effective and easy-to-install version. The plastic guide roller is simply guided through a collar in the profile slot. The roller unit assembly consists of a plate, roller, bolt, extra-wide washer, flanged button-head screw and nut.

25 | **40** | 50 | 60

Fastening example

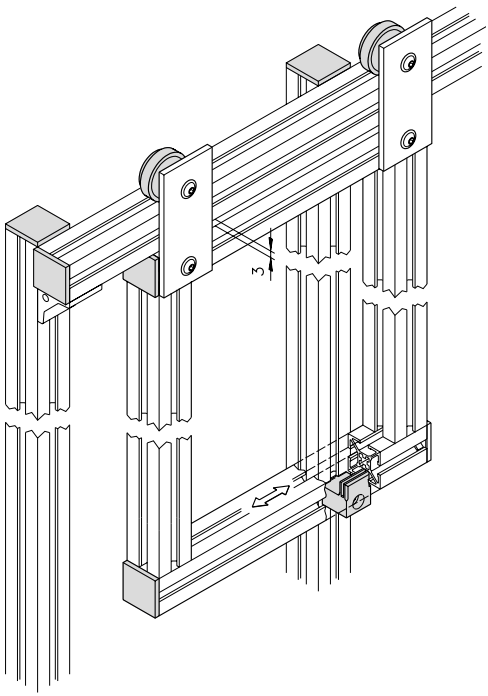

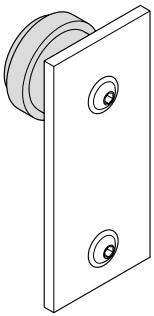

Roller unit
B68.11.003

Roller: POM
Plate: Tumbled Al

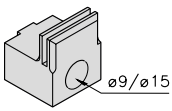

M8x25

Guide piece
19.00.0005

Black plastic

Hinged Safety Interlocks

The hinged safety interlock is suitable for swing doors that must be closed to ensure the required operational safety.

Properties

- Plastic housing
- Protective earthing
- High resistance to oil and petrol
- Dimensions: 111.5 mm x 92 mm x 36 mm
- Easy installation, especially on 40 mm profiles
- Universal installation in guarding with hinges on the left or right
- Mounting bores for M6 countersunk head screws according to DIN 965
- Two M20x1.5 cable openings

Fastening example

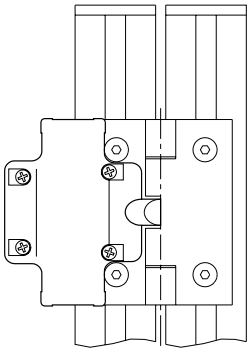

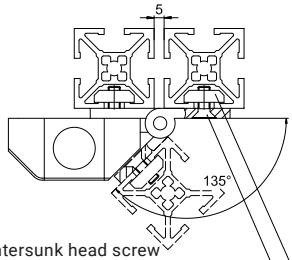

Countersunk head screw
M6x16 **D7991616**

Nut 1 M6 **34.02.0008**, galv. steel

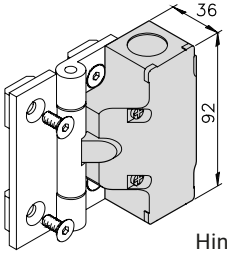

Hinged safety interlock
TESZ1102/S
K370000030

Max. safety category/ performance level:	Without 2nd switch: max. SC 4, PL “e”
Contacts:	1 normally open, 2 normally closed
Degree of protection:	IP 65
Control voltage:	24 V DC

The switching element and actuating keys for the safety interlocks are not connected to each other, but are functionally combined or separated when switching. The actuating key is separated from the basic device when the guarding is opened. In doing so, the normally closed contacts are opened and the normally open contacts are closed in the safety interlock.

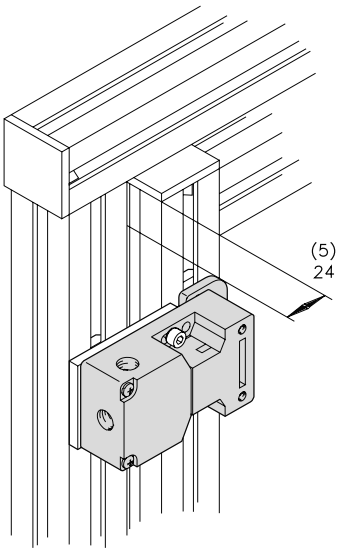

Safety Interlocks with Separate Actuating Key

The safety interlock with separate actuating key is suitable for guarding that is laterally adjustable and/or rotatable, and especially for removable guarding that has to be shut in order to ensure the necessary operational safety.

Properties

- Plastic housing
- Protective earthing
- Large space for connecting cables
- Dimensions: 52 mm x 90 mm x 30 mm
- Multiple coding
- Long service life
- High contact reliability at low currents
- Oblong bores for adjusting, round bores for fixing
- Three M16x1.5 cable openings

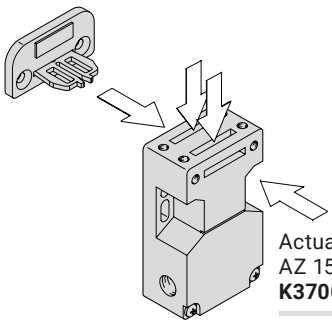

Actuating key
AZ 15/16-B1-1747
K370000011

Safety interlock
AZ 16ZVRK – M16
K370000010

Max. safety category/ performance level:	Without 2nd switch: max. SC 3, PL “d”
Contacts:	1 normally open, 1 normally closed
Degree of protection:	IP 67
Retaining force:	30 N
Control voltage:	24 V DC

The switching element and actuating keys for the safety interlocks are not connected to each other, but are functionally combined or separated when switching. The actuating key is separated from the basic device when the guarding is opened. In doing so, the normally closed contacts are opened and the normally open contacts are closed in the safety interlock.

Magnetic Safety Interlocks

The safety interlock with separate actuating key is suitable for guarding that is laterally adjustable and/or rotatable, and especially for removable guarding that has to be shut in order to ensure the necessary operational safety.

Properties

- Plastic housing
- Suitable for food production
- Concealed installation possible
- Dimensions: 52 mm x 90 mm x 39 mm
- Long service life
- Resists lateral misalignment
- No mechanical wear
- Resistant to dirt
- Three M20x1.5 cable openings
- Cable connection space
- Max. 6 mm locking distance

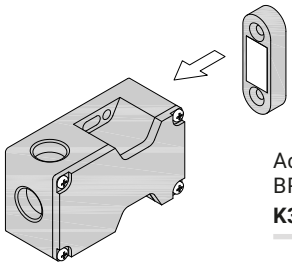

Actuating key
BPS 16 magnet
K370000013

Safety interlock
BNS 16-12ZV
K370000012

Max. safety category/ performance level:	Without 2nd switch: max. SC 3, PL “d”
Contacts:	1 normally open, 2 normally closed
Degree of protection:	IP 67
Control voltage:	24 V DC

Fasteners for Safety Interlocks

The fastener set for safety interlocks can be used on swing doors with a gap of 5 to 24 mm.

Material: Tumbled aluminium plate

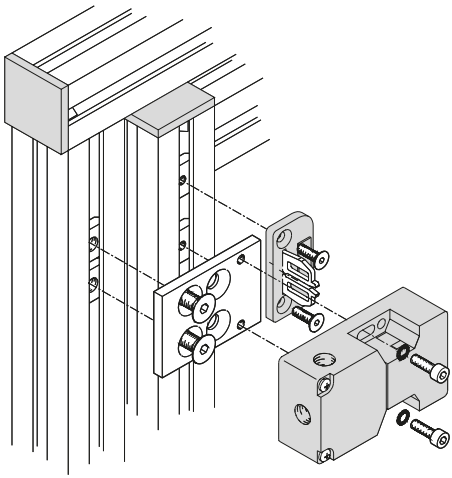

Safety interlock fastener set for swing doors
B16.03.001

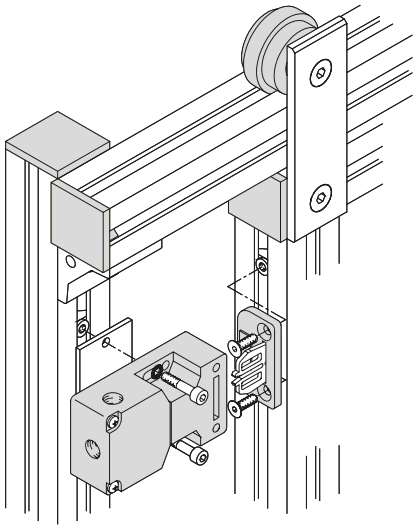

Safety interlock fastener set for sliding doors
B16.03.002

Mechanical Solenoid Latches

The solenoid latch ensures that sliding, rotating or removable guarding cannot be opened until the hazardous situation, e.g. coasting motion, has ended.

Properties

- Plastic housing
- Protective earthing
- Failsafe locking
- Dimensions: 130 mm x 90 mm x 30 mm
- Six contacts
- Long service life
- Large space for connecting cables
- Manual release
- Four M16x1.5 cable openings
- De-energise to trip

Protective doors that are secured with solenoid latches are generally only opened in exceptional cases. Solenoid latches use electric magnets to activate an interlock, which blocks or triggers the actuating key of the switch.

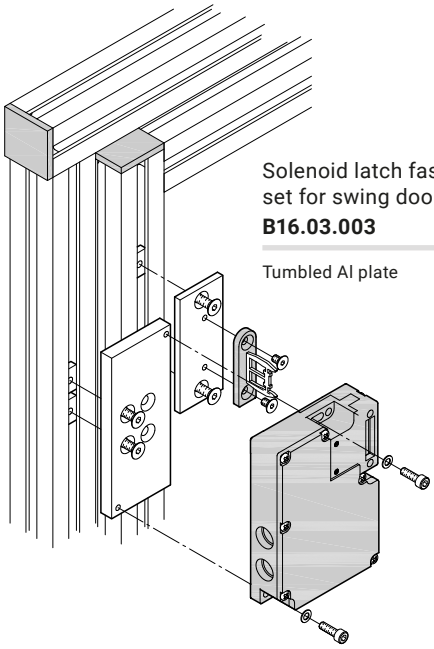

Solenoid latch fastener set for swing doors
B16.03.003

Tumbled Al plate

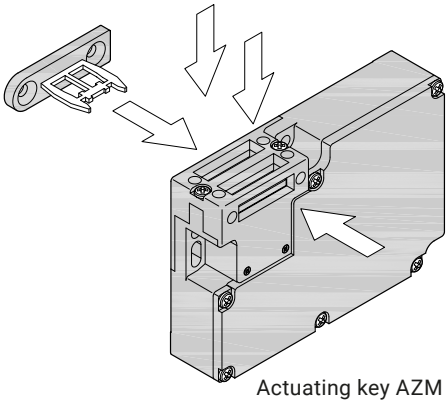

Actuating key AZM 161-B1
K370000021

Solenoid latch
AZM 161SK-12/12RK-024
K370000020

Max. safety category/ performance level:	Without 2nd switch: max. SC 3, PL “d”
Contacts:	2 normally open, 4 normally closed
Degree of protection:	IP 67
Retaining force:	2000 N
Control voltage:	24 V DC

Electronic Solenoid Latches

Properties

- Plastic housing
- Three different actuation directions
- Compact design
- Non-contact, coded electronic system
- Three LEDs for displaying operating states
- Resistant to cleaning agents
- Suitable for hinged and sliding doors
- Series circuit
- Manual release
- M12, eight-pin plug connector
- De-energise to trip
- Lock monitoring
- Diagnostics output

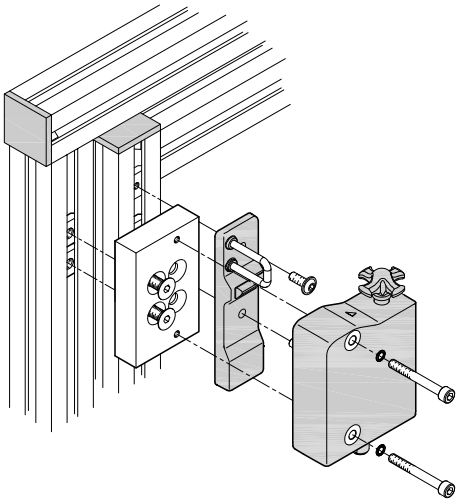

Fastener set for solenoid latch
B16.03.008

Tumbled Al plate

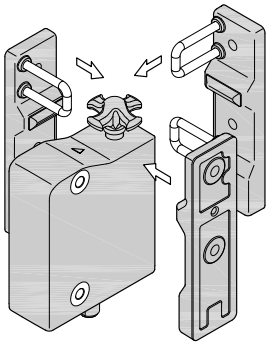

Actuating key
AZ/AZM 300-B1
K370000023

Electronic solenoid latch
AZM 300Z-ST-1P2P
K370000022

with lock monitoring

Performance level:	max. PL “e”
Contacts:	1 sourcing diagnostic output (Out), 2 sourcing safety outputs Out: guarding closed/ guarding closed and locked
Degree of protection:	IP66, IP67, IP69
Retaining force:	1000 N
Locking force:	25 N/50 N, set using rotating cross
Control voltage:	24 V DC

Fastening example

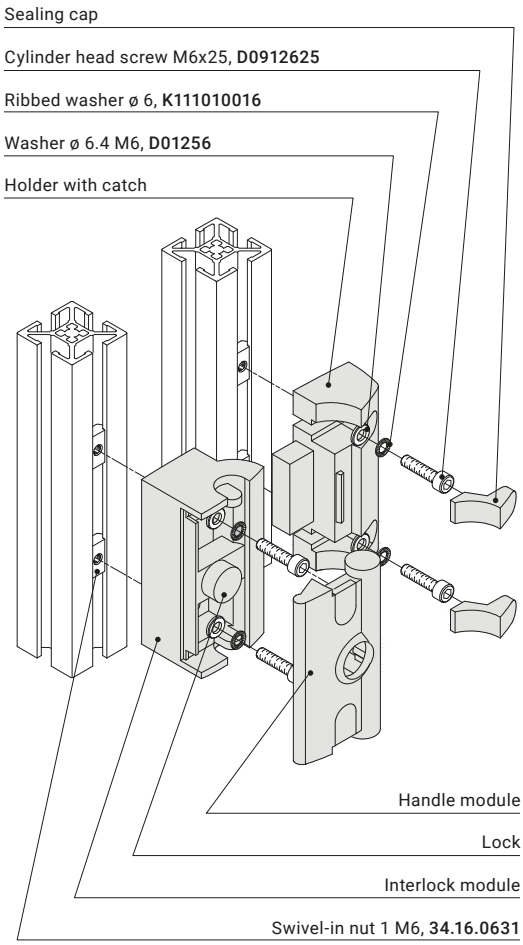

Slam Latches

Slam latches are multi-functional door handles for securing and monitoring guarding. They consist of a handle and an interlock module. The PROe lock has additional transponder-coded safety technology according to EN ISO 13849-1 (Cat. 4/PL e).

- Can be installed without machining
- For use with left-hinged and right-hinged doors
- Lockable to prevent unwanted shutdowns
- Secured against disassembly in closed state

Material: Black power-coasted die-cast aluminium

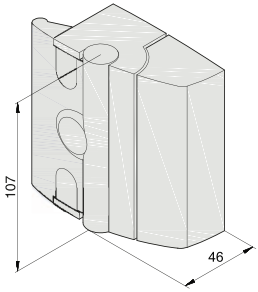

PRO slam latch
B68.02.031

with fastening accessories

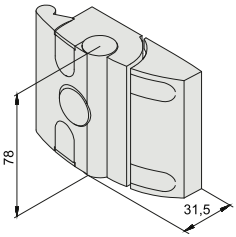

Compact slam latch
B68.02.030

with fastening accessories

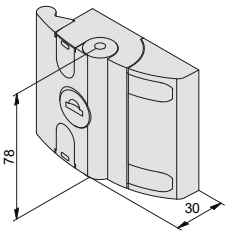

Compact slam latch
K117050009

Sliding door latch

without fastening accessories

Emergency Opener for Slam Latch

For rear emergency release of the PRO and Compact slam latches. Works even when the latch is locked. When the emergency opener is engaged, the door cannot be locked.

Material: PA 6 plastic, glass fibre reinforced

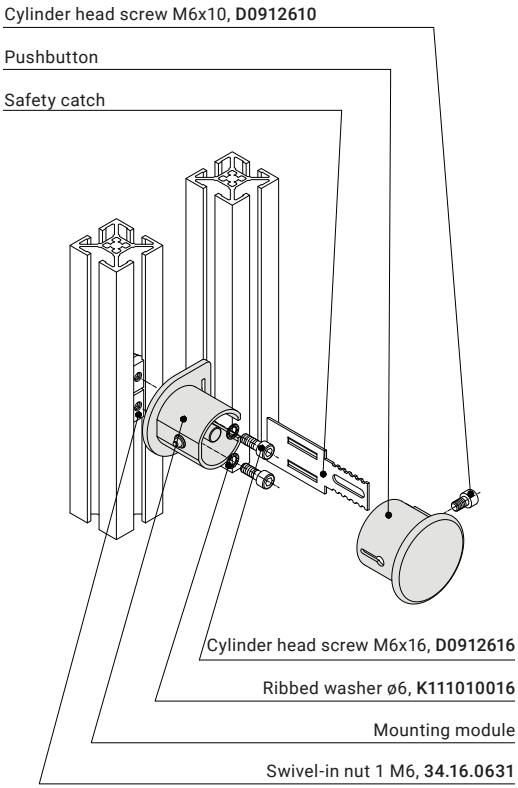

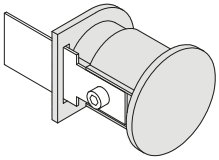

Emergency opener
B68.02.033

with fastening accessories

Handles

Bracket Handles

The bracket handles shown here can be used in any application and are made from sturdy plastic. The bracket handle is simply screwed into a 10 mm T-slot. It is used for opening/closing doors, windows, covers, flaps and various other components.

Material: PA plastic

25 | 40 | 50 | 60

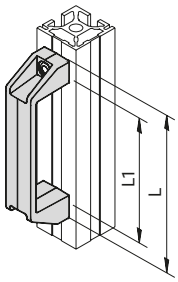

Bracket handle	Width L [mm]	Hole distance L1 [mm]	Width [mm]	Height [mm]
K110000021	142	122	26	41
K110000020	170	152	28	60

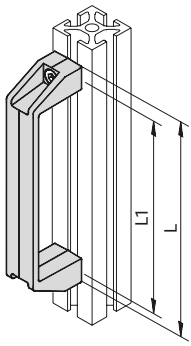

Bracket handle	Width L [mm]	Hole distance L1 [mm]	Width [mm]	Height [mm]
K110000009	135	117	26	41
K110000010	195	179	28	50

7

Fastening example for **K110000021** and **K110000020**

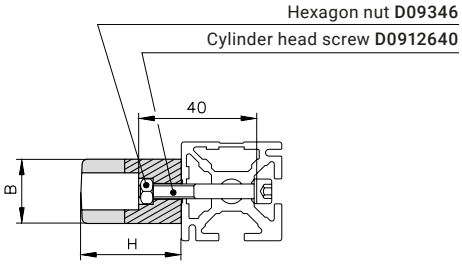

Fastening example for **K110000009** and **K110000010**

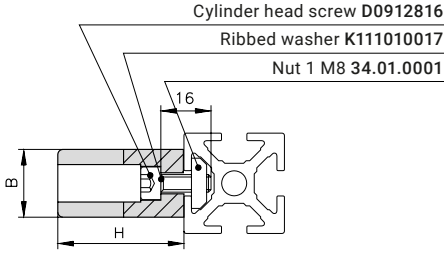

Bracket Handles

This sturdy bracket handle can be used in any application. The grip area is made from anodized aluminium. The bracket handle is simply screwed into a 10 mm T-slot. It is used for opening/closing doors, windows, covers, flaps and various other components.

Material: PA6 plastic end pieces, anodised aluminium tube

25 | 40 | 50 | 60

Fastening example for **K110000011**

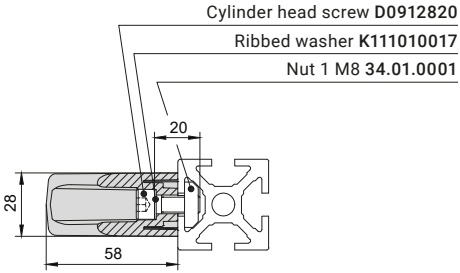

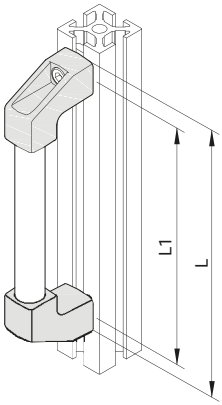

Bracket handle	Width L [mm]	Hole distance L1 [mm]	Width [mm]	Height [mm]
K110000011	217	200	28	58
K110000012	317	300	28	58
K110000013	417	400	28	58

Handles

Bracket Handles

This ergonomic bracket handle with reach-through protection is used for opening/closing doors, windows, guarding covers, guarding flaps and other components. The curved bracket handle minimises the risk of crushing injuries. The bracket handle is simply screwed into a 10 mm T-slot. You can cover the screws with the provided caps.

Material: PA plastic

7

Fastening example for **K110000023**

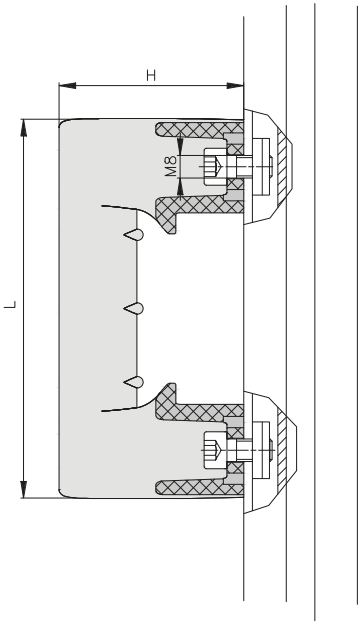

25 40 50 60

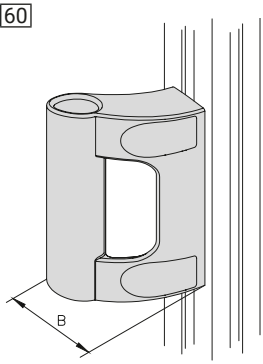

Bracket handle	Length [mm]	Width [mm]	Height [mm]
K110000023	135	65	72

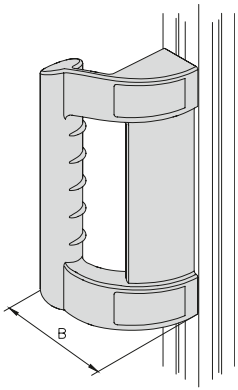

Bracket handle	Length [mm]	Width [mm]	Height [mm]
K110000025	240	80	100

Profile for Strip Handles

The mk 2244 application profile can be used as a strip handle, with the recess in the profile providing a comfortable grip. The ribbing provides the perfect structured surface for easily opening and closing drawers, sliding doors or other components. You can use any length of profile.

Material: Anodised aluminium

25 | 40 | 50 | 60

Fastening example for profile mk 2244

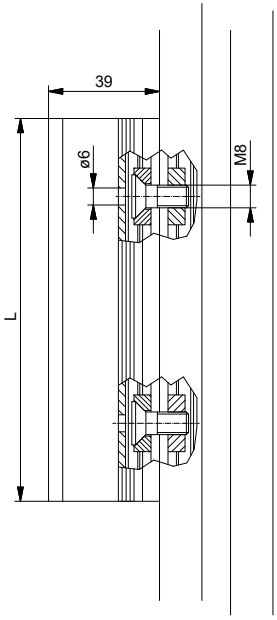

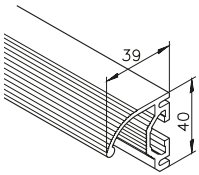

Profile mk 2244

0.87 kg/m

Stock length	**52.44.5100**
Cut	**52.44. ....**

Section 8 Industrial Workstations

Notes on Industrial Workstations

Benefits of mk Industrial Workstations 280
Workstation Ergonomics 281
Standards and ESD Protection 282
Earth Terminal 282

Table Frames

Fixed Working Height 284
Manual Height Adjustment 285
Manual-Hydraulic Height Adjustment 286
Electrical Height Adjustment 287
Electrical Height Adjustment Heavy-Duty 288

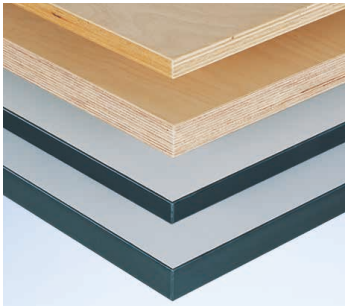

Table Tops

Table Top Materials 290
Table Top Fasteners 291

Drawer Cabinets 292

Gantries 294

Provision of Material

Rack Systems 296
Swivel Arms 297
Kanban components 298
Bin Mounts 300
Shelves 301
Monitor Mount 302
Tool Hangers 303
Document Holders 304
Bottle Holders 305

Lighting

LED System Lamps 306
LED Illuminated Magnifying Glass 307

Power Supply

Pneumatic Unit 310
Electrical Supply 311

Accessories

Support Brackets 314
Floor Mats 315

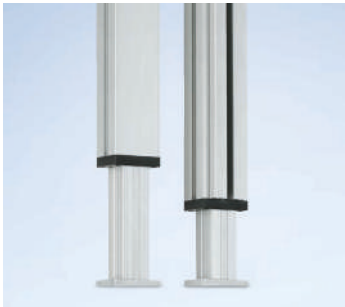

Application Profiles for Workstations

Profiles for Telescoping 316
Profiles for Table/ Machine Frames 318
Profile for Support Brackets 319

Notes on Industrial Workstations

8

Benefits of mk Industrial Workstations

- Ergonomic and highly functional industrial workstations for optimal productivity
- Aluminium profile construction for ultimate flexibility to expand and make changes
- Table frame with an adjustable height and variable material provision systems allow the workstation to be adapted to the employee
- Extensively customisable, with gantries, shelving systems, electrical and pneumatic supply options, tool hangers and drawer cabinets
- mk's extensive experience in expanding these stations into complete assembly lines, including workstation interlinking
- Custom solutions to fit existing processes, including requirements relating to lean production, kanban, ESD or cleanroom processes

Workstation Ergonomics

Ergonomic Reach Zones

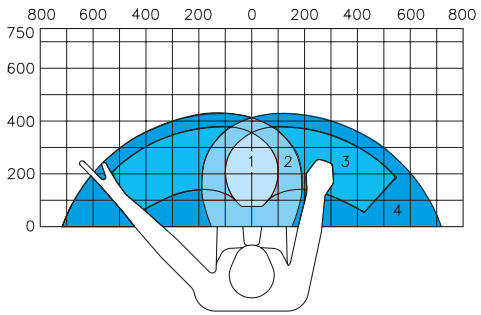

Zone 1	Work area
Zone 2	Extended work zone
Zone 3	One-hand zone
Zone 4	Extended one-hand zone

Ergonomic Sit-to-Stand Workstation

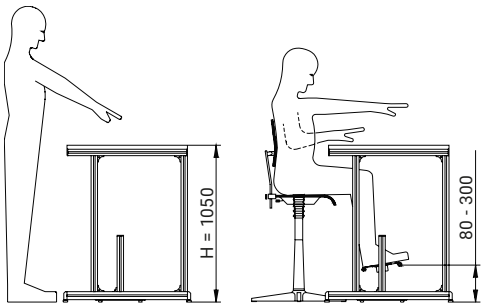

The option to sit or stand can be provided with a height adjustment mechanism or using a chair and footrest, as shown here. This reduces strain on the employee's spine and intervertebral discs.

The word "ergonomics" comes from Greek and translates roughly to the study of human work. Having ergonomically designed industrial workstations not only increases productivity and reduces the rate of mistakes, but also improves employee health and therefore improves morale and the working environment. mk industrial workstations can be quickly and easily adjusted each employee's particular physical needs. This includes a height adjustment mechanism and a design that allows the workpiece, the tools and the bins for providing materials to be optimally positioned within the employee's reach for the particular task. This helps employees avoid unhealthy postures and optimises productivity. Providing optimal lighting for the particular task is another critical factor that mk has incorporated with its variable lighting system.

Notes on Industrial Workstations

Standards and Regulations

In designing its industrial workstations, mk has followed all applicable standards and regulations, for example DIN EN ISO 6385 (Ergonomics principles in the design of work systems).

Earthing and Protective Conductors

If industrial workstations are electrified (e.g. lighting, electrical sockets, etc.), DIN VDE 0100- 410 specifies that all of a workstation's conductive components must be connected together and with the protective conductor of the supply line so that protection against electric shock is ensured in the event of a fault.

Connecting the profiles with angles and ESD nuts, sometimes known as PE nuts, ensures conductivity throughout the entire workstation. If the workstation is electrified after construction, this means that the protective conductor has to be connected to the workstation in only one location to provide earthing.

Earth Terminal

The earth terminal is used to connect the protective conductor to the industrial workstation to ensure protection against electric shock. This also protects sensitive components against electrostatic discharge.

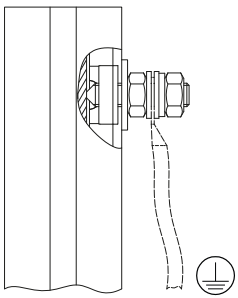

Earth terminal
B02.99.151

Angle Fastener with ESD Nuts

The pressed protrusion on the nut penetrates the profile's insulating anodised coating and ensures that the connection is conductive through the screw connection.

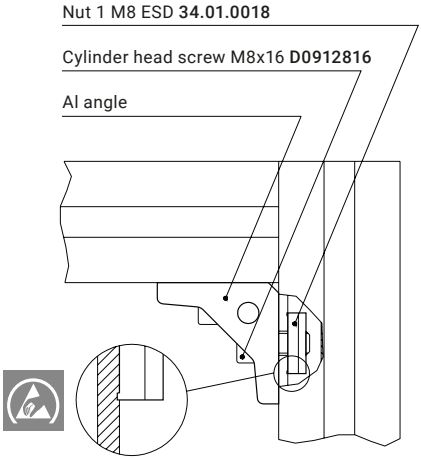

Notes

Table Frames

Fixed Working Height

Our table frames with a fixed working height are made from mk's Series 40 profiles and feature a sturdy pedestal design. The standard dimensions shown here allow it to be used as a sit-to-stand workstation. Custom dimensions can also be implemented, although our standard range complies with ergonomics recommendations from the applicable standards.

For table tops, on page 290

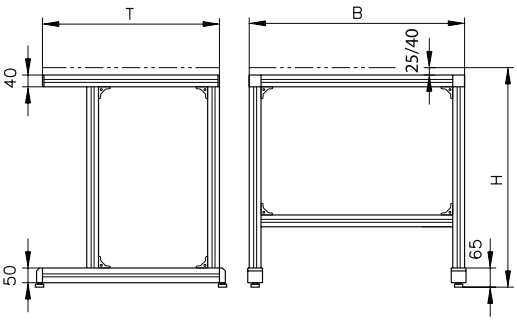

Table frame C1

B02.13.030

Loads

Load scenario	Top thickness	Surface load	Total load
Static load	< 35 mm	2000 N/m²	2000 N
Static load	> 35 mm	2500 N/m²	4000 N

Standard dimensions (mm)

Height H*	Depth T	Width B
850	600	1200
1050	750	1400
		1600

*Including 25 mm table top

Other dimensions possible. Heavy-duty design for high loads available on request. Steel privacy panelling in various RAL colours available.

Manual Height Adjustment

Our table frames with an adjustable working height are made from mk's Series 40 profiles and feature a sturdy pedestal design. In this table design, the height is adjusted using telescoping profiles with a fastening screw. This allows the working height to be easily adjusted while maintaining stability and load capacity.

For telescoping profiles, on page 316
For table tops, on page 290

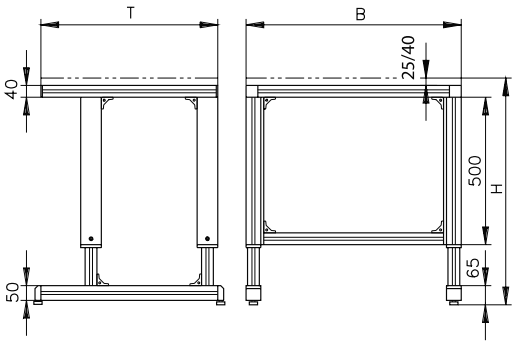

Table frame D1

B02.13.040

Loads

Load scenario	Top thickness	Surface load	Total load
Static load	< 35 mm	2000 N/m²	2000 N
Static load	> 35 mm	2500 N/m²	4000 N

Standard dimensions (mm)

Height H*	Depth T	Width B
680 to 1070	600 750	1200 1400 1600

*Including 25 mm table top

Other dimensions possible. Heavy-duty design for high loads available on request. Steel privacy panelling in various RAL colours available.

Table Frames

Manual-Hydraulic Height Adjustment

Our table frames with an adjustable working height are made from mk's Series 40 profiles and feature a sturdy pedestal design. In this table design, the height is adjusted using telescoping profiles with a matching gliding assembly and a hand crank. This allows you to quickly adapt the working height to the user or the workpiece. The employee can also switch between sitting and standing. The required driving torque of about 6 Nm is within the boundaries of the ergonomics requirements for the design of control actuators, DIN EN 894-3, for manual actuation. 5 mm stroke per crank rotation.

For telescoping profiles, on page 316
For table tops, on page 290

8

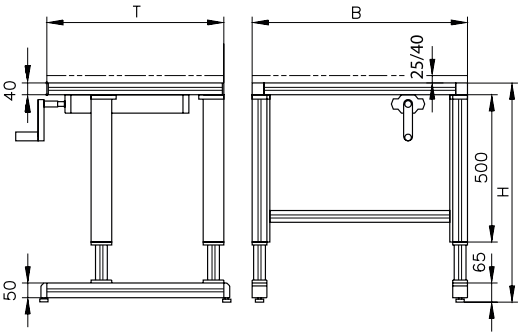

Table frame D4

B02.13.043

Loads

Load scenario	Top thickness	Surface load	Total load
Static load	< 35 mm	2000 N/m²	2000 N
	> 35 mm	2500 N/m²	2800 N
Dynamic load*	< 35 mm	1600 N/m²	1600 N
	> 35 mm	1600 N/m²	1600 N

*Maximum load under which the table can still be moved

Standard dimensions (mm)

Height H*	Depth T	Width B
680 to 1070	750 800	1200 1400 1600

*Including 25 mm table top

Other dimensions possible. Heavy-duty design for high loads available on request. Steel privacy panelling in various RAL colours available.

For table tops, on page 290

Electrical Height Adjustment

Our table frames with electrical height adjustment made from mk's Series 40 profiles are suitable for both sitting and standing. A button with an optional memory function is used to adjust the height of the workbench within a 400 mm range. A selection of different table tops, accessory components and additions such as gantries are presented on the following pages.

Technical data

Travel speed	v = 12 mm/s
Voltage/frequency	230 V/50 Hz
Operating voltage (secondary)	24 V DC
Controller protection class	IP20
Motor/remote control protection class	IP30
Turnkey system with 3 m mains cable	

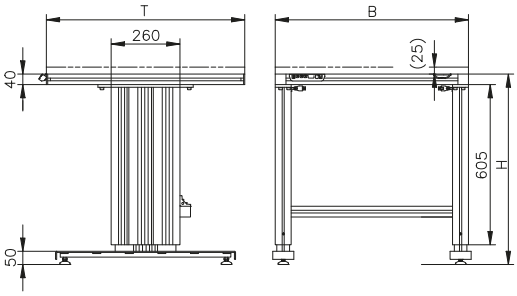

Table frame J1

B02.13.090

Loads

Load scenario	Top thickness	Surface load	Total load
Static load	25-40 mm	2000 N/m²	3000 N

Standard dimensions (mm)

Height H	Depth T	Width B
720 to 1120	700	1200
+ table top thickness	750	1600
	800	2000

Other dimensions possible.

Table Frames

Electrical Height Adjustment Heavy-Duty

The heavy-duty version of the workbench with electrical height adjustment features a table frame made from mk 2040.02 (40x80) profiles that goes around the entire table and a maximum load capacity of 4500 N. A button with an optional memory function is used to adjust the height of the workbench within a 400 mm range. A selection of different table tops, accessory components and additions such as gantries are presented on the following pages.

For table tops, on page 290

Technical data

Travel speed	v = 9 mm/s
Voltage/frequency	230 V/50 Hz
Operating voltage (secondary)	24 V DC
Controller protection class	IP20
Motor/remote control protection class	IP30
Turnkey system with 3 m mains cable	

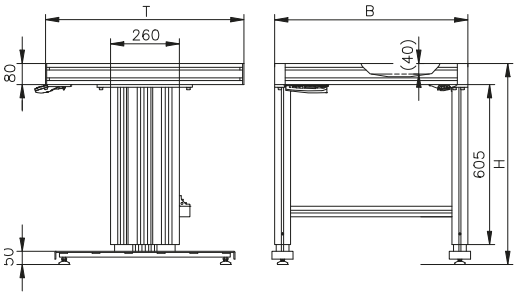

Table frame K1 (heavy duty) B02.13.100

Loads

Load scenario	Top thickness	Surface load	Total load
Static load	40 mm	3000 N/m²	4500 N

Standard dimensions (mm)

Height H	Depth T	Width B
760 to 1160	700	1200
	750	1600
	800	2000

Other dimensions possible.

Notes

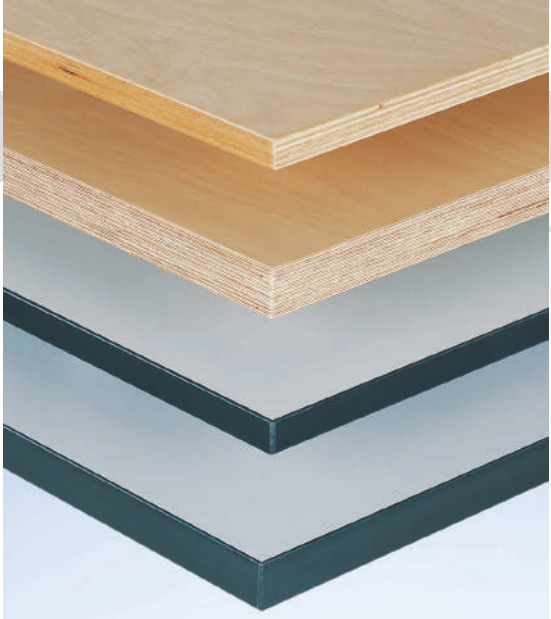

Table Tops

Table Top Materials

Potential factors for choosing a table top material include the stability and material of the workpiece and the wear resistance of the table top. Environmental conditions such as moisture or high temperatures can also influence the choice of material. On request, other surface materials such as stainless steel sheet or laminated wood can be used. ESD-compatible tops are also available on request.

8

Beechwood Multiplex Tops

- Multi-bonded beechwood
- Resistant to warping
- Jointless
- Ground natural surface, waterproofed on request

Thickness [mm]	Mass [kg/m²]	Item no.
25	19	**50.13.5005**
40	30	**50.13.5008**

Painted surfaces on request.

Laminated Particleboard

- Light grey standard colour
- Black edge band with rounded edges (grey on request)
- High resistance to shocks and impacts

Thickness [mm]	Mass [kg/m²]	Item no.
19,0	15	**50.13.6006**
25,0	19	**50.13.6007**
39,6	29	**50.13.6008**

Conductive design (ESD) on request.

Table Top Fasteners

The table tops can be mounted using angles or with the fastener set shown here. Holders such as angles can be used for both multiplex and laminated tops in any thickness offered.

Angles
starting on page 78

Fastening example

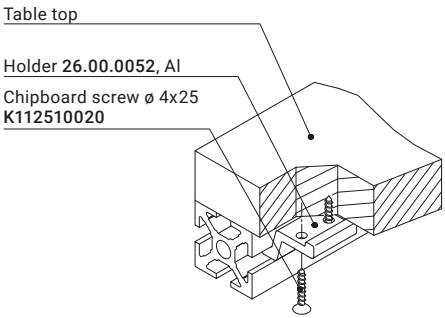

Fastener set
for 20 to 40 mm table tops
B02.99.050

Consists of:
6 x holders **26.00.0052**
12 x chipboard screws ø 4x25 **K112510020**

Drawer Cabinets

Drawer cabinets provide sufficient storage space for items needed at the workstation. They keep the workstation professionally organised without encroaching on the work space. The casing is made of a large, reinforced sheet steel structure. It can withstand loads up to 200 kg. All drawer cabinets are equipped with a cylinder lock and painted in RAL 7035. All base cabinets can be installed on either the right or the left side.

Fastening example for table depth T = 600

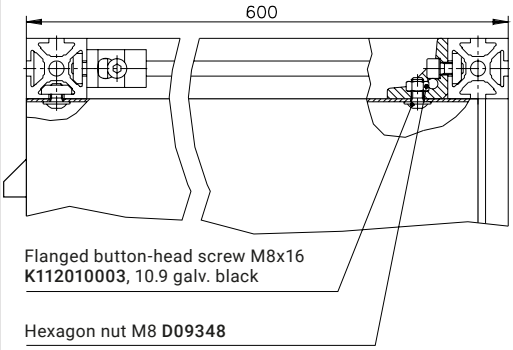

Fastening example for table depth T = 750

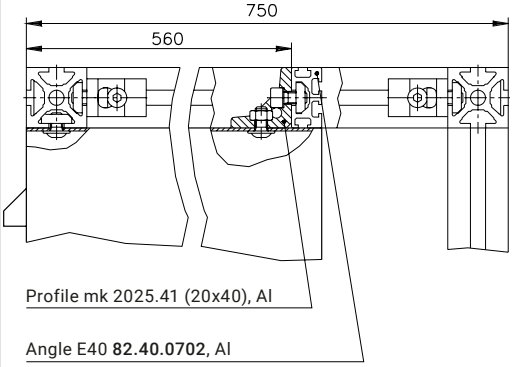

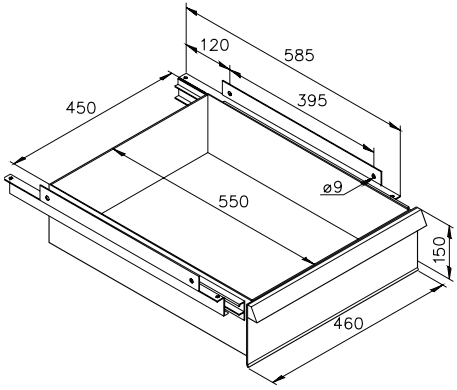

Drawer
B02.23.903

m = 8 kg

Fastener set
B02.99.004

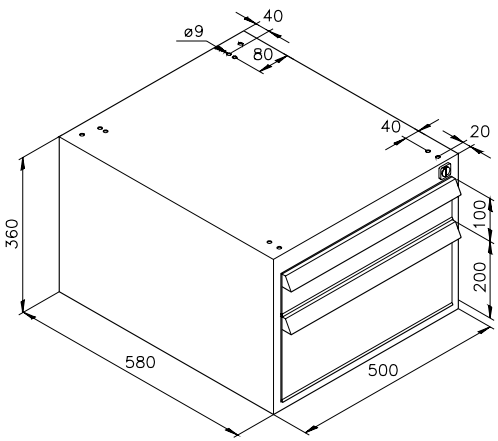

Drawer cabinet, two drawers
B02.23.902

m = 23 kg

Fastener set
Table depth T = 600 mm
B02.99.001

Fastener set
Table depth T > 600 mm
B02.99.002

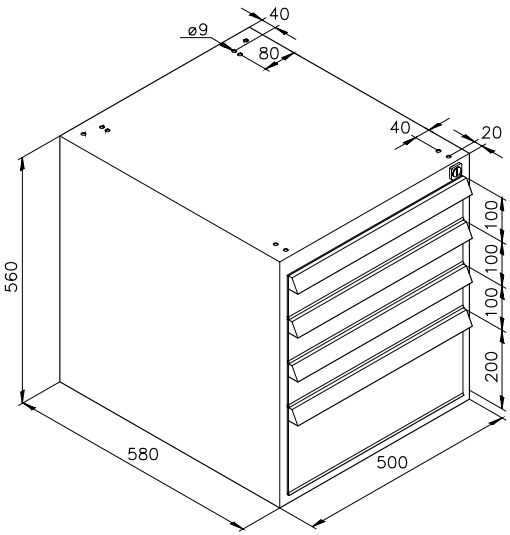

Drawer cabinet, four drawers
B02.23.901

m = 35 kg

Fastener set
Table depth T = 600 mm
B02.99.001

Fastener set
Table depth T > 600 mm
B02.99.002

Gantries

Gantries can be used to attach mounted parts in order to provide process-specific equipment in an ergonomic configuration. For example, you can install shelves, electrical and pneumatic supply lines, tools, shelves for informational media and accessories. Gantries come equipped with a C-rail as standard for attaching tool sliders. The heights of the gantry's beams and cantilevers can be adjusted. We offer a heavy duty gantry for higher load requirements.

For table tops, on page 290

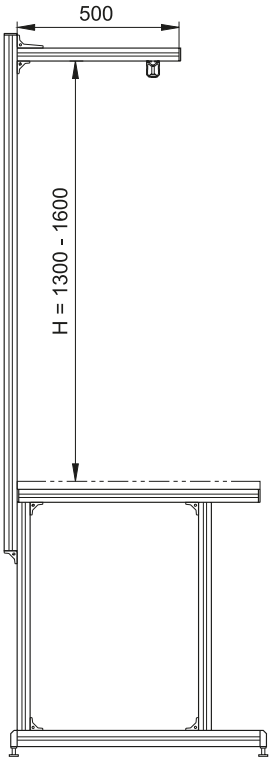

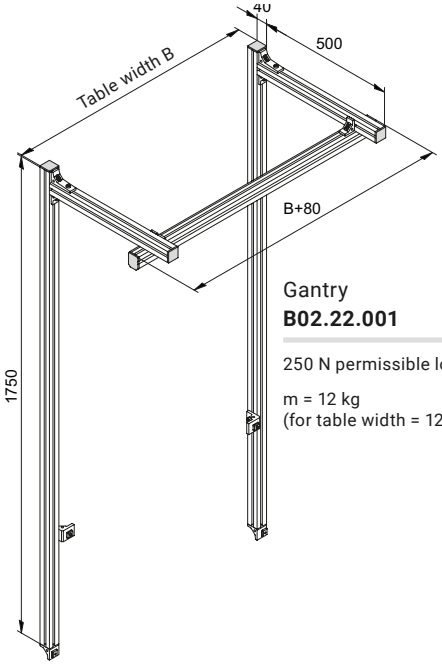

Gantry
B02.22.001

250 N permissible load

m = 12 kg
(for table width = 1200 mm)

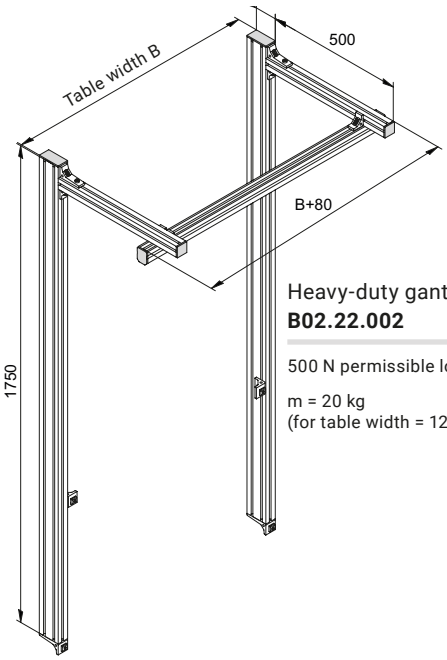

Heavy-duty gantry
B02.22.002

500 N permissible load

m = 20 kg
(for table width = 1200 mm)

Please specify the table width and table depth when ordering.

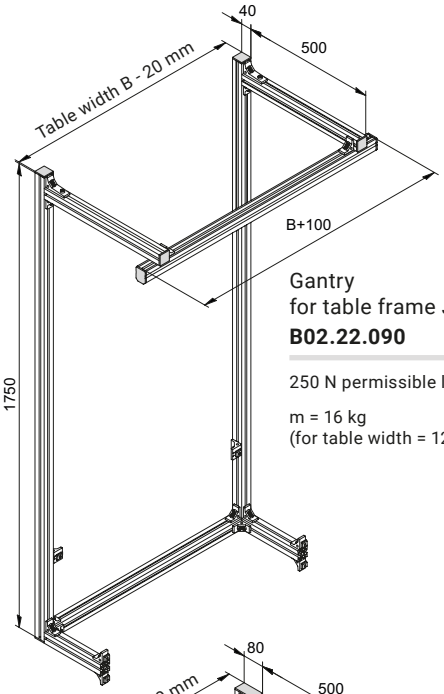

Gantry
for table frame J1/K1
B02.22.090

250 N permissible load

m = 16 kg
(for table width = 1200 mm)

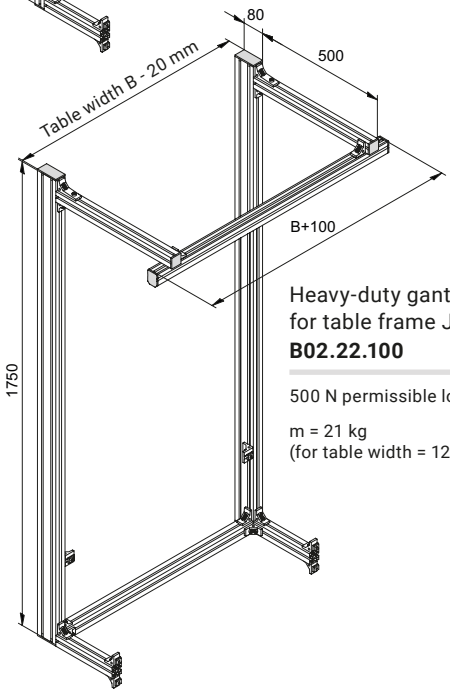

Heavy-duty gantry
for table frame J1/K1
B02.22.100

500 N permissible load

m = 21 kg
(for table width = 1200 mm)

Provision of Material

Rack Systems

Rack systems are used to hold bins, tools, measuring instruments or components to be mounted. The steel shelf can be titled at any angle from -30° to +30° by adjusting the angled fasteners. The sturdy chipboard shelf is suitable for heavier loads. Both rack systems have angled fasteners that allow you to adjust the depth and height of the shelves for optimal positioning.

Please specify the width and depth when ordering.

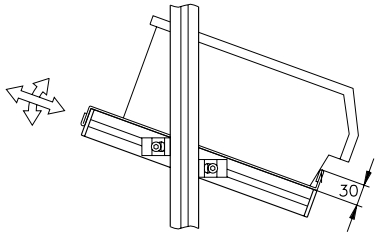

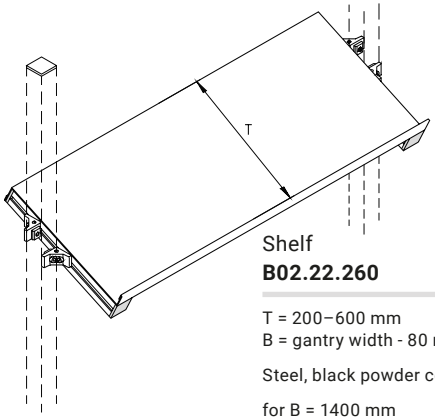

Shelf
B02.22.260

T = 200–600 mm
B = gantry width - 80 mm

Steel, black powder coated

for B = 1400 mm
m = 8 kg
F_s = 800 N
F_p = 500 N

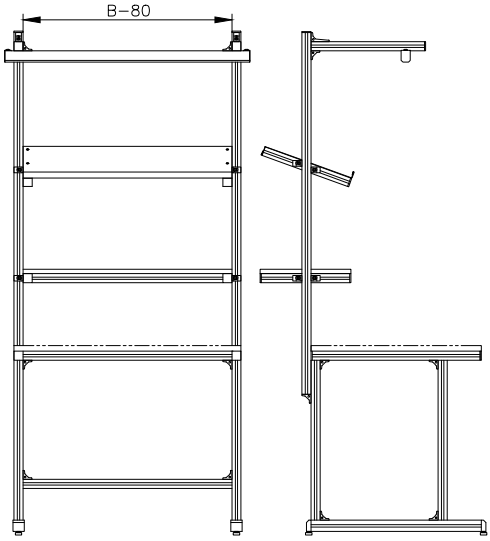

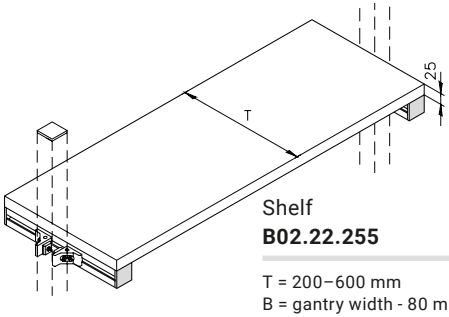

Shelf
B02.22.255

T = 200–600 mm
B = gantry width - 80 mm

Laminated particleboard

for B = 1400 mm
m = 14 kg
F_s = 1200 N
F_p = 800 N

F_s = surface load
F_p = point load (max. load on a surface of at least 200 x 200 mm)

Swivel Arms

Uses for swivel arms range from holding shelves, to holding containers for small parts, to connecting monitors. In addition to creating additional work space, they can be adjusted to provide an ergonomically optimal layout for the worker. The clamping lever or cylinder head screw can be used for attachment.

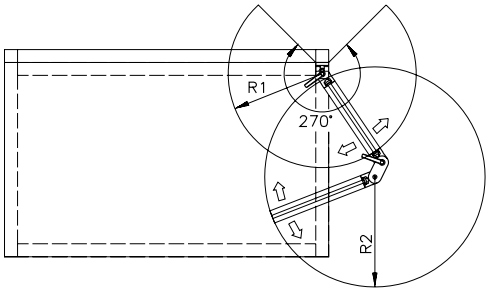

R1 max = 290 mm
R2 max = 340 mm

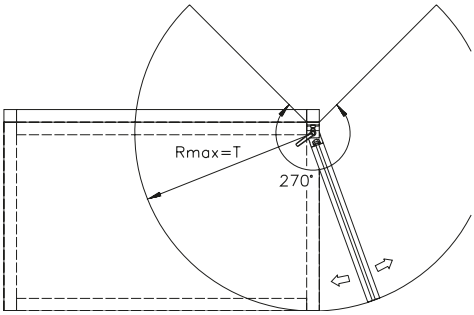

T = table depth

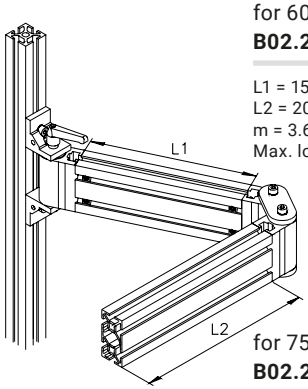

Double swivel arm
for 600 mm table depth
B02.24.360

L1 = 150 mm
L2 = 200 mm
m = 3.6 kg
Max. load = 300 N

for 750 mm table depth
B02.24.361

L1 = 200 mm
L2 = 300 mm
m = 4 kg
Max. load = 300 N

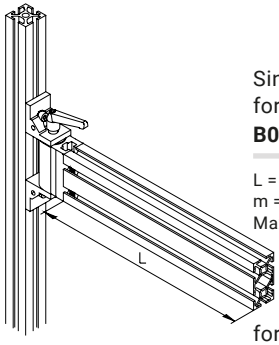

Single swivel arm
for 600 mm table depth
B02.24.362

L = 250 mm
m = 1.7 kg
Max. load = 300 N

for 750 mm table depth
B02.24.363

L = 400 mm
m = 2.2 kg
Max. load = 300 N

Kanban components

RBS-P 2065/2066 roller conveyor

Our RBS-P 2065/2066 gravity roller conveyor is well suited for ensuring efficient material flows at picking stations or kanban shelves. You can select rolls between ø20 and 50 mm depending on your total load and required spacing. An inclination of 1 to 2° is usually sufficient for reliable feeding. Please note that high speeds can be reached with long lines and/or steeper slopes. This kinetic energy will require dampened deceleration.

The RBS-P 2065/2066 roller conveyor is available both with and without ESD protection.

For further information, see the conveyor technology (CT) catalogue

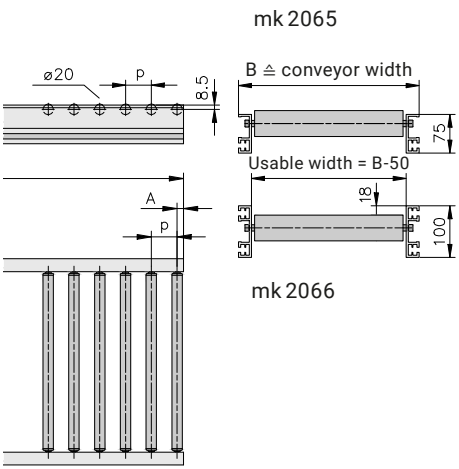

RBS-P 2065/2066
with ø 20 rolls
B61.00.001

RBS-P 2065/2066
with ø 40 rolls
B61.00.002

RBS-P 2065/2066
with ø 50 rolls
B61.00.003

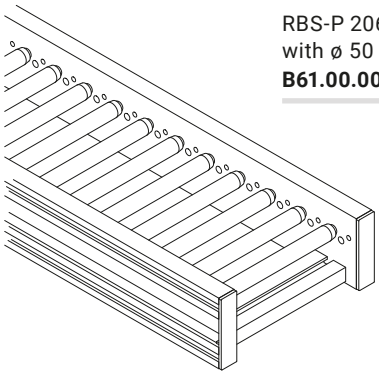

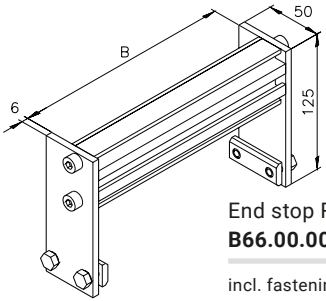

End stop RBS-P 2065/66
B66.00.003

incl. fastening accessories

Kanban components

Roller strips

Roller strips are used in carton flow racks to ensure smooth movement of transport boxes and cardboard boxes. They can be delivered in lengths up to 4500 mm. The roller spacing is either 33 mm or 49.5 mm. If using long roller strips or heavy loads, we recommend installing parallel or perpendicular profiles underneath the strips for support. The rollers are mounted on steel axles and are available with and without flanges.

Materials: galvanised steel U-rails, yellow plastic rollers

See Series D28 round tube profiles on page 40

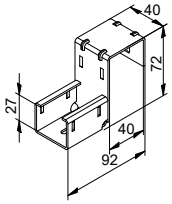

35/40 L holder
for roller strip
K12005Z0004

for series 40 profiles

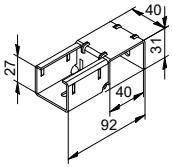

35/40 H holder
for roller strip
K12005Z0003

for series 40 profiles

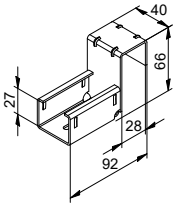

35/28 L holder
for roller strip
K12005Z0002

for series D28
round tube profiles

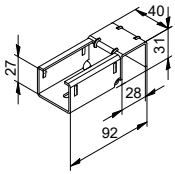

35/28 H holder
for roller strip
K12005Z0001

for series D28
round tube profiles

Roller strips with L holders hang lower than the profile, which means the profile can act as a stop. Roller strips with H holders hang at the same height as the profile, meaning you can simply push a box over the profile, for example.

Mounting example with 35/40 L holder

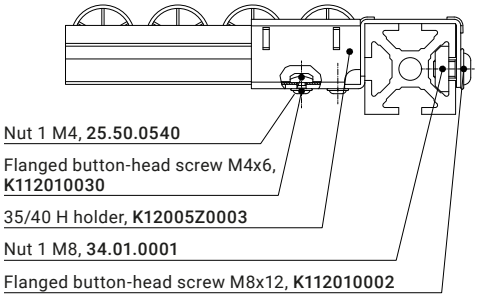

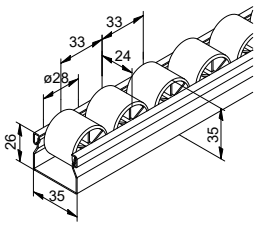

Roller strip
K1200535CGE. ....

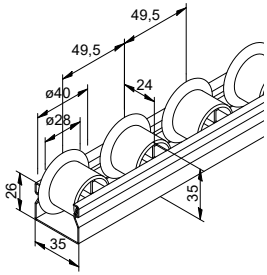

Roller strip with flanged rollers
K1200535FGE. ....

Provision of Material

Bin Mounts

Bins can be used with bin holders or a rack and attached to a swivel arm to save space and allow for optimal ergonomic positioning. Alternatively, you can hook bins into the T-slot of an mk 2040.22 profile (40x80).

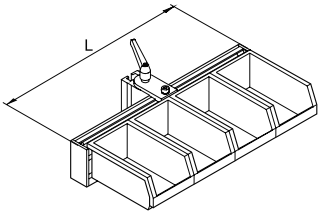

Bin holder
B02.24.366

L = (bin width + 1 mm) x N

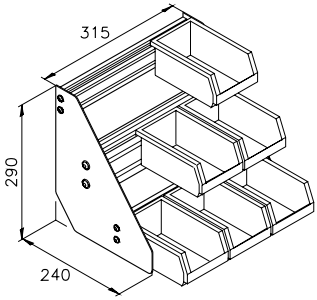

Rack
B02.24.367

with swivel arm connection

m = 3.4 kg

Rack
B02.24.356

without swivel arm connection

m = 2.5 kg

Series 40, 2.75 mm slot width, for bin LF211/LF221

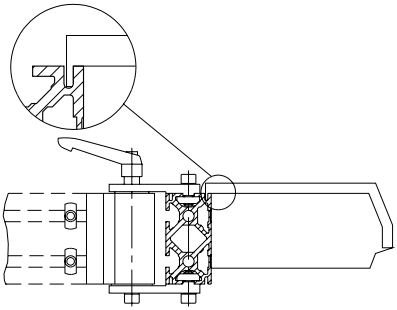

Series 25, 2.75 mm slot width, for bin LF211 only

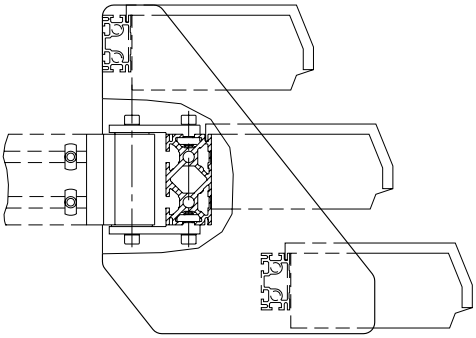

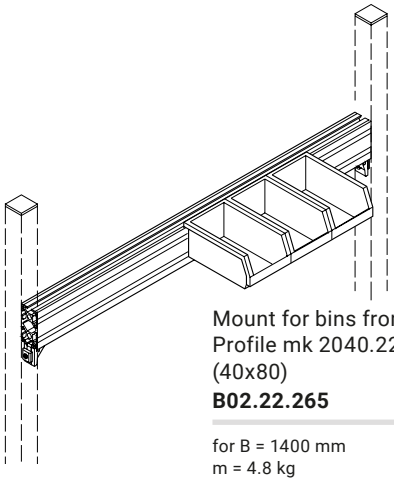

Mount for bins from Profile mk 2040.22 (40x80)
B02.22.265

for B = 1400 mm
m = 4.8 kg

Shelves

Angled or straight shelves are connected to a swivel arm, which allows you to provide informational media or other media in the optimal ergonomic position.

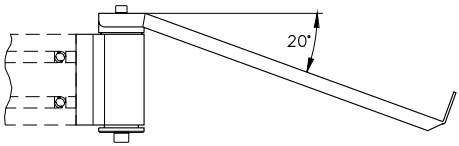

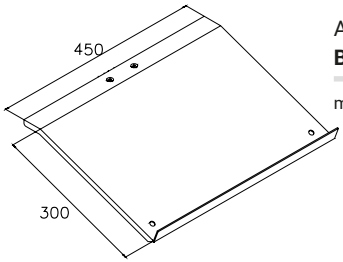

Angled shelf
B02.24.364

m = 3.6 kg

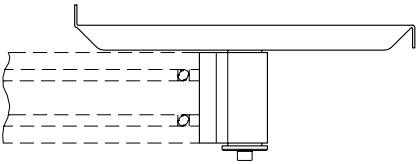

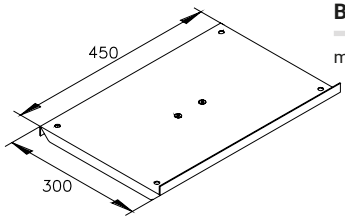

Straight shelf
B02.24.365

m = 3.4 kg

Monitor Mount

The monitor mount with included mounting plate and flange can be attached to vertical or horizontal profiles or to surfaces. It is extremely flexible, with five axes, height adjustment, and 360-degree monitor swivel. It is suitable for VESA-compatible monitors (VESA 75 and 100).

Material: monitor mount made of die-cast aluminium, mounting material steel

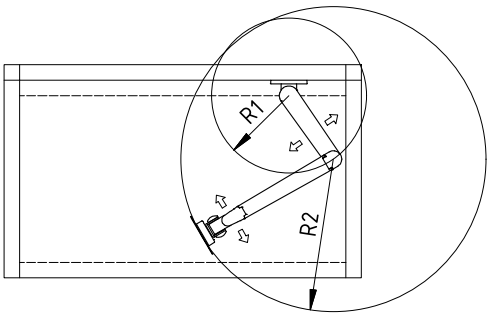

R1 = 200 mm
R2 max = 390 mm

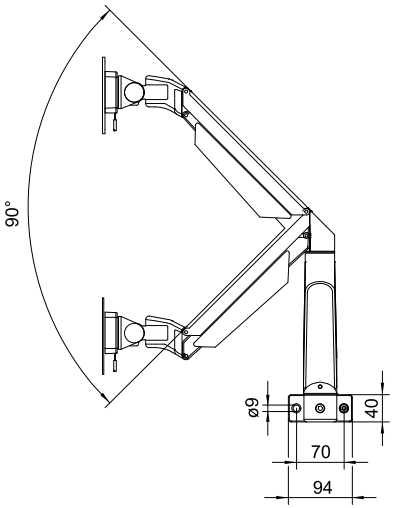

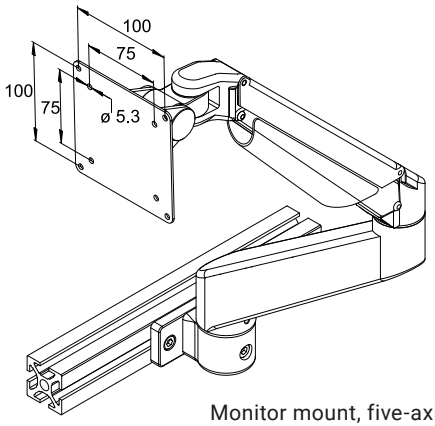

Monitor mount, five-axis, height adjustable
K120000118

configurable load: 2-10 kg

with fastening accessories

Tool Hangers

The tool hanger components shown here are just our standard selection. Custom components are also available on request. Tools hangers improve organisation and safety at the workstation. They also make tools available without encroaching on the work space. The adjustable spring tension system reduces strain and improves ergonomics for the user.

End cap, on page 153

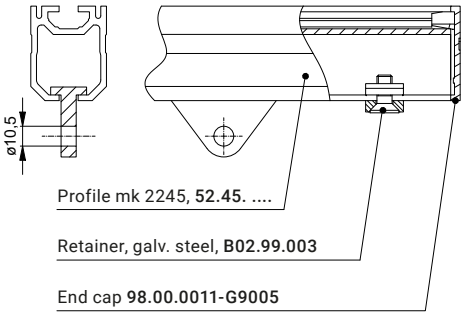

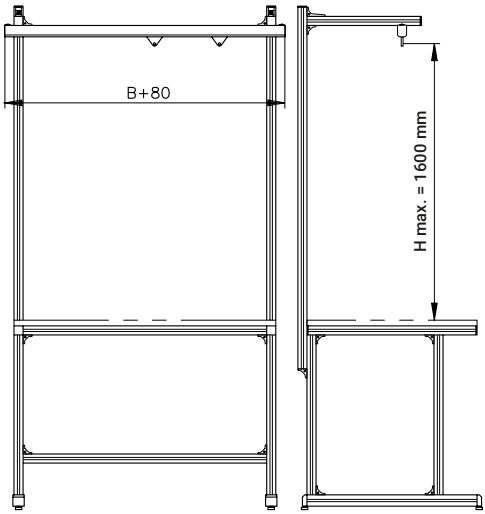

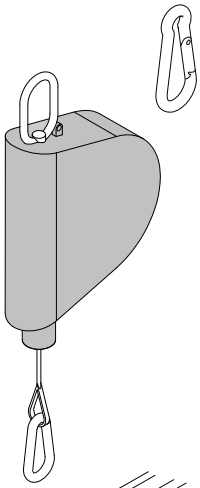

Snap hook
K120010003

Spring balancer F2
DIN 15112
K120010006

Load capacity: 0.5–2.0 kg
Max. rope extension: 2.5 m
Min. installation length: 0.36 m

Spring balancer F3
DIN 15112
K120010005

Load capacity: 1.5-3.0 kg
Max. rope extension: 2.5 m
Min. installation length: 0.36 m

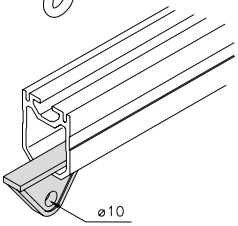

Sliding piece
K120010004

PAGF plastic

Retainer for sliding piece
B02.99.003

Galv. steel

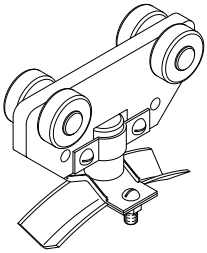

Roller unit for carrying cables and hoses
K120010001

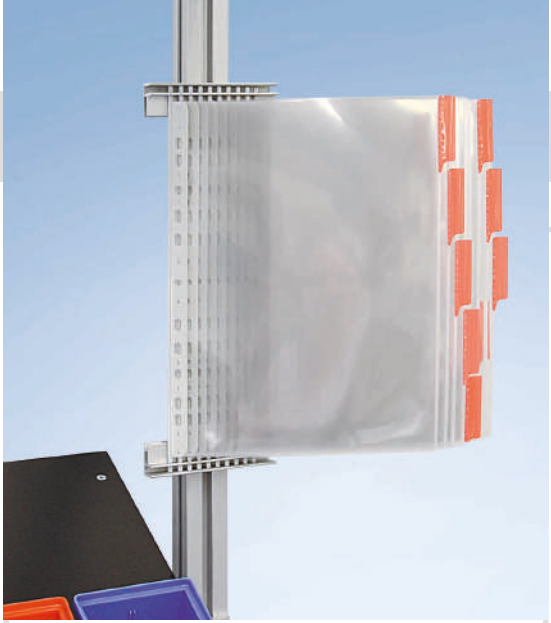

Provision of Material

Document Holders

Document holders allow you to protect and store documents, such as instructions for mounting or inspection logs, at the workstation in an orderly manner. Simply screw them to the gantry at the desired height.

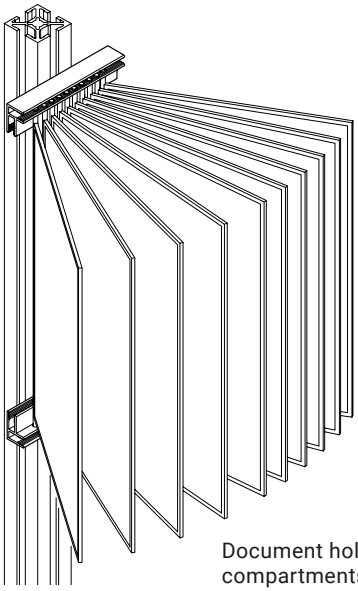

Document holder, 10 compartments, A4 height

B02.99.041

Bottle Holders

Bottle holders have a diameter of 100 mm and are designed for the secure storage of all common beverage bottles, cans, cups and drink boxes. The cut-out at the front makes the holders suitable for cups with a handle. The version with an open bottom can also be used to store a screwdriver or other such equipment. Simply screw it to the gantry at the desired height using the mounting plate.

Material: PA plastic

25 | 40 | 50 | 60

Fastening example

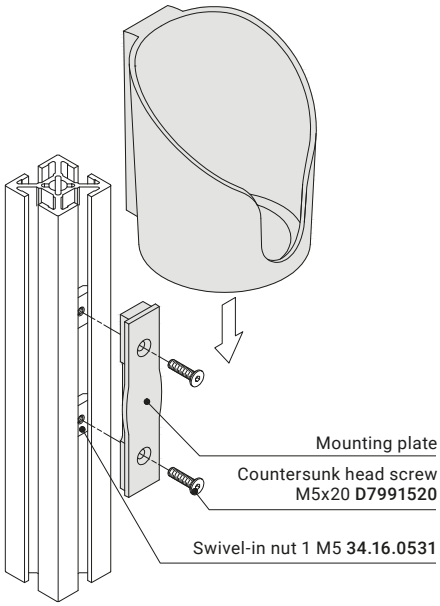

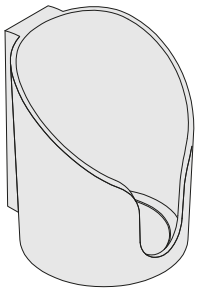

Bottle holder
with closed bottom
K120000120

Including mounting plate

Total load = max. 5 kg

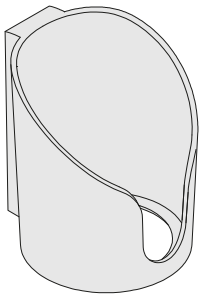

Bottle holder
with open bottom
K120000121

Including mounting plate

Total load = max. 5 kg

Lighting

LED System Lamps

mk's LED system lamps provide bright, even lighting of the work space without glare. The colour temperature is 5000K at a power of 15 to 64 watts, depending on the version. The lamps are CE certified, designed for operation with a 230V main voltage and delivered with a three-metre connection cable. They can be rigidly mounted or can be made to swivel using a flexible holder set. The swivel range is from 25° backwards to 90° forwards. Versions 1 and 2 function as swivelling side lighting and are attached on the right or left side using angles.

LED

Dimensional sketches

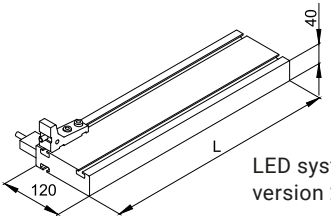

LED system lamp, version 2

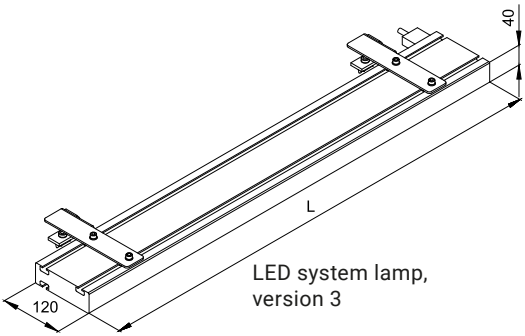

LED system lamp, version 3

Ver-sions	Item no.	L [mm]	Power [W]	Mounting
1	**B02.23.808**	450	15	left/ swivelling
2	**B02.23.809**	450	15	right/ swivelling
3	**B02.23.810**	900	35	swivelling
4	**B02.23.811**	1200	40	swivelling
5	**B02.23.812**	1500	64	swivelling
6	**B02.23.813**	2x900	2x35	swivelling

Measurement points for versions 1 + 2

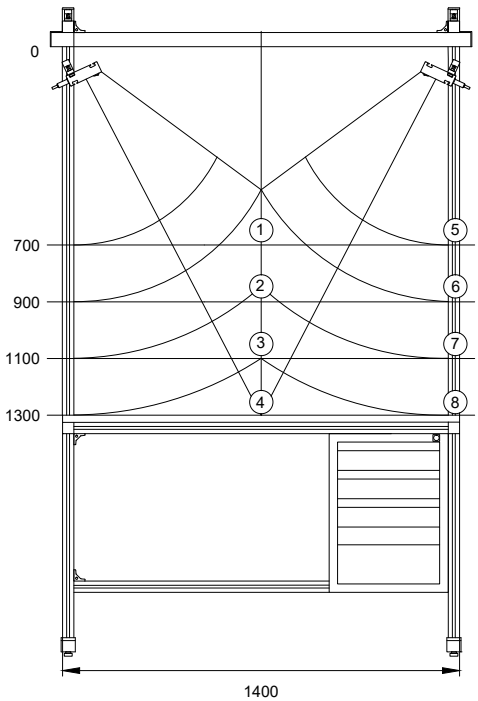

Measurement points for versions 3 to 5

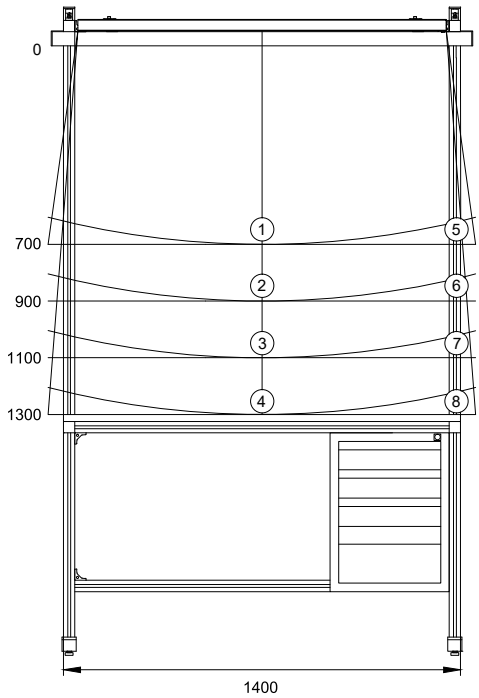

Illuminance

Measurement point	Version 1 + 2 (lux)	Version 3 (lux)	Version 4 (lux)	Version 5 (lux)
1	500	1550	1650	2000
2	450	1350	1450	1800
3	380	1150	1250	1600
4	300	1000	1100	1400
5	400	700	700	1000
6	350	650	650	820
7	300	580	600	750
8	250	500	550	700

Lighting

LED Illuminated Magnifying Glass

The LED illuminated magnifying glass provides the perfect combination of ideal magnification and excellent illumination. The illuminated magnifying glass is intended for use wherever unaided human eyes come up against their limits. A field of view perfectly adjusted to the distance between the eyes ensures distortion-free vision and ergonomic work. A well-balanced articulated arm and step-less dimming make the LED illuminated magnifying glass an indispensable tool for all manner of industrial applications.

LED

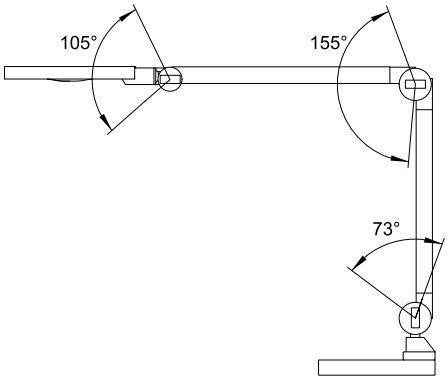

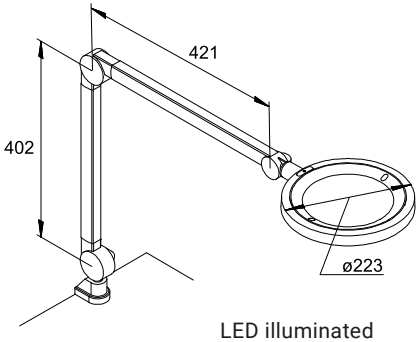

LED illuminated magnifying glass
B02.23.807

with fastening accessories

Watts [W]	Em [lx]	Emin [lx]	Emax [lx]
15 W	5176	1784	7457

Em = average illumination strength
Emax = maximum illumination strength
Measuring field for the illumination strength 30x30 cm
Measuring distance 15 cm

Notes

Power Supply

Pneumatic Units

Compressed air is distributed through the pneumatic unit, which consists of mk 2040.02 (40x80) profiles along with connectors and fasteners. A major advantage of using profiles to supply the air is that it allows for great flexibility in the position and quantity of connection/distributor plates. The Pneumatic unit is designed for a maximum operating pressure of 6 bar.

Pneumatic components starting on page 205

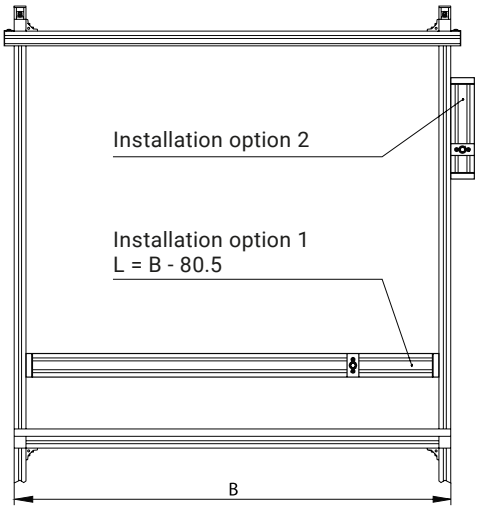

Base unit with connection plates, assembly available in various configurations

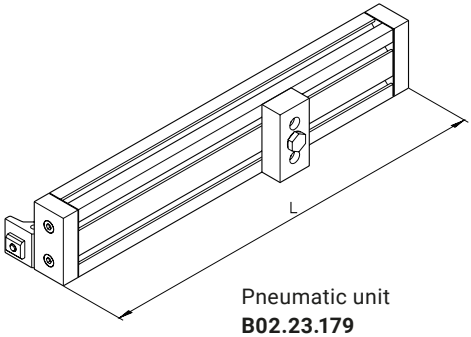

Pneumatic unit
B02.23.179

for B = 1400 mm
m = approx. 5.5 kg

Electrical Supply

The simplest way to supply electricity is using power strips in two different designs. The strips have an illuminated 16 A rocker switch, which has a 2-pole switch-off. The supply lines are 1.75 m long. They contain a longitudinal slot and eyelet for fastening them in various positions on the profile.

Fastening example

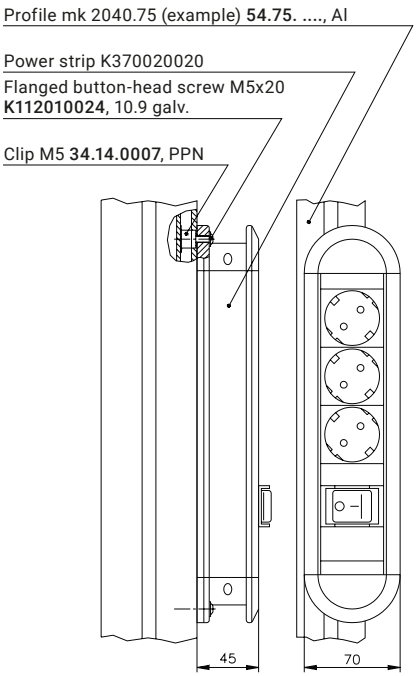

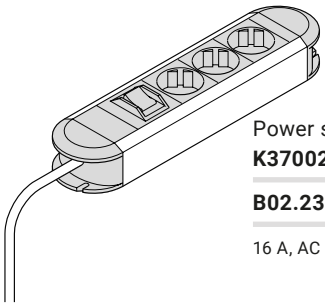

Power strip, 3 sockets
K370020020

B02.23.581*

16 A, AC 250 V, 3680 W

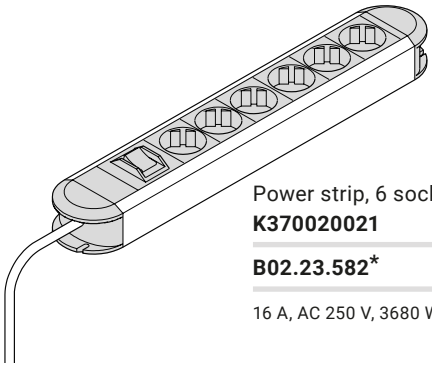

Power strip, 6 sockets
K370020021

B02.23.582*

16 A, AC 250 V, 3680 W

*With fastening accessories

Power Supply

Electrical Supply

The standard electrical supply system is a combination of mk 2040.41 (40x80) and mk 2069 profiles. The unit features exceptional stability and a closed design. Various sockets and switch combinations can be freely positioned along the entire working width. A major advantage of this system is that you can change or add equipment very easily, even custom components. The power supply system is tested in accordance with DIN VDE 0100-410 and includes a circuit diagram. The unit is delivered with a 3 m cable and plug.

Material: Anodised aluminium

Fastening example

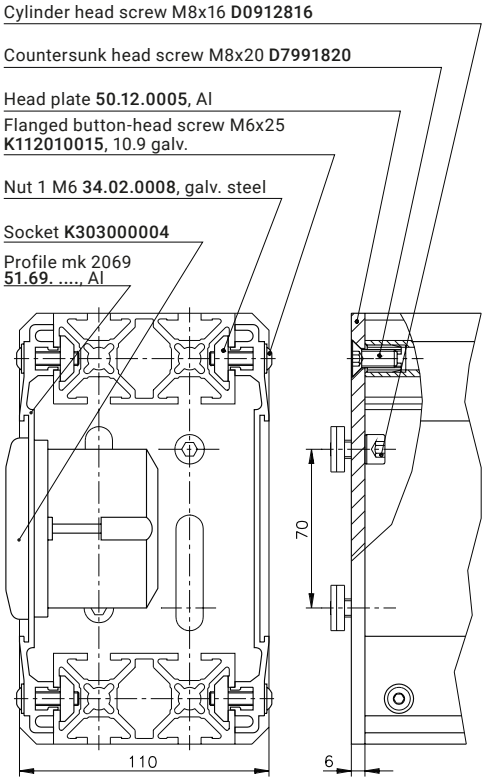

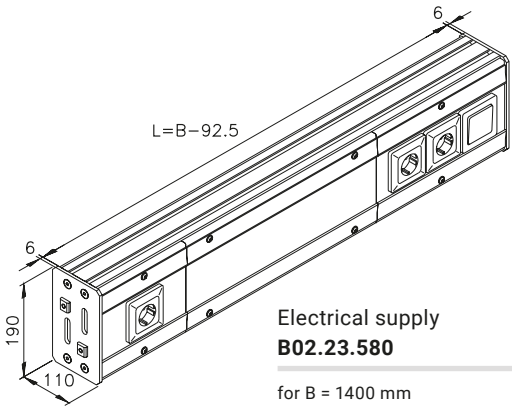

Electrical supply
B02.23.580

for B = 1400 mm

m = 11 kg

Permitted up to max. 16 A

Choice of equipment
on the strip

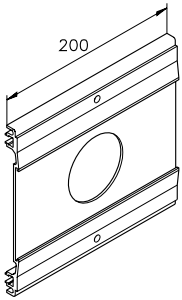

Single module profile mk 2069
5169BB0200

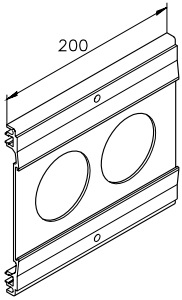

Double module profile mk 2069
5169BC0200

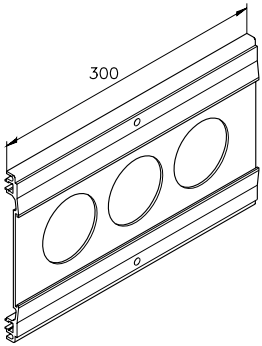

Triple module profile mk 2069
5169BD0300

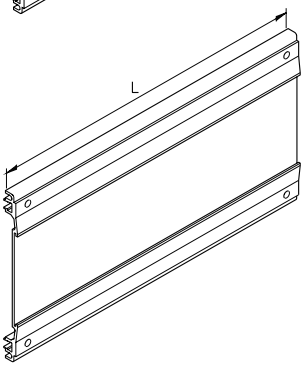

Cover module profile mk 2069
5169BA ....

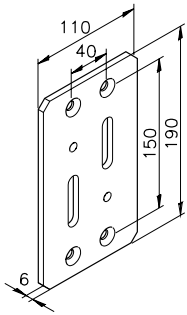

Head plate
50.12.0005

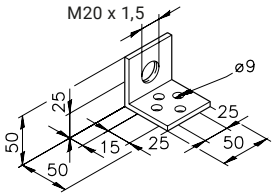

Tension relief angle
16.05.0030

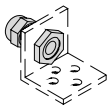

Cable gland consisting of:
Nut M20
K310.000.015.003

Screw connection
K310.000.018.007

plastic, grey

for 7 to 13 mm cable diameter

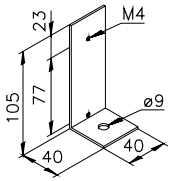

Angle for junction box
82.01.0007

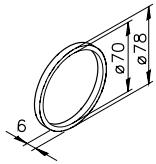

Spacer ring for hollow wall box
16.01.0038

8

Accessories

Support Brackets

The correct seat height adjustment is an important prerequisite for low-stress work at the workbench. This is correct when the forearms/upper arms are parallel to the table surface, the upper and lower leg are at an angle of at least 90° and the feet are resting completely on the floor. If the workbench is too high, a footrest can compensate for the distance between the feet and the floor. The infinitely adjustable footrest ensures the most comfortable foot position and relieves the legs ensuring pleasant working conditions.

See profile for footrests on page 319

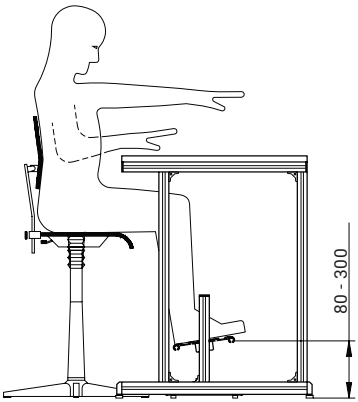

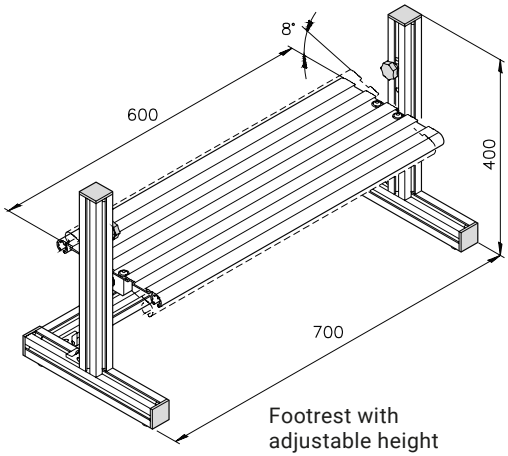

Footrest with adjustable height
H min - 83 mm
H max - 300 mm
B02.21.030

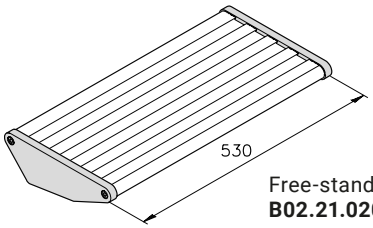

Free-standing footrest
B02.21.020

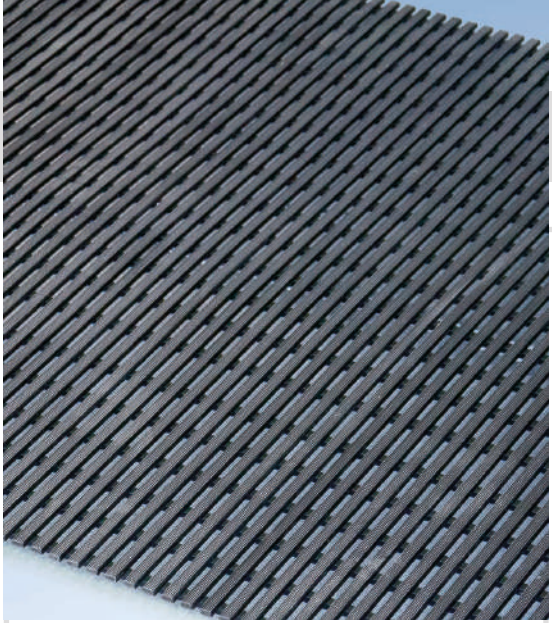

Floor Mats

Floor mats made from black TPE-V ensure that workers do not slip at industrial workstations while also reducing strain on their musculature and skeletal systems.

Benefits:

- Hollow spaces reduce strain on the musculature and joints
- Anti-slip
- Oil resistant
- Various dimensions up to 1.2 m wide and 15 m long with 3 mm thickness
- Highly flame-resistant version available

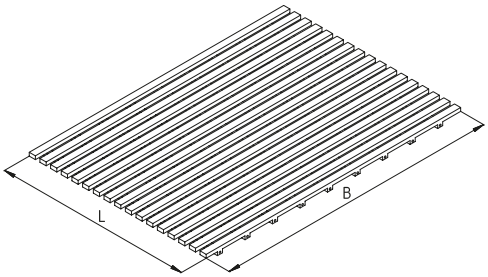

Floor mat

Item no.	Width B [mm]	Length L [m]
K12002.0600	600	max. 15
K12002.0800	800	max. 15
K12002.1000	1000	max. 15
K12002.1200	1200	max. 15

Floor mat B1
(highly flame resistant according to DIN 4102-1 B1)

Item no.	Width B [mm]	Length L [m]
K12003.0600	600	max. 15
K12003.0800	800	max. 15
K12003.1000	1000	max. 15
K12003.1200	1200	max. 15

Application Profiles for Workstations

Profiles for Telescoping

The components shown below enable you to create manual or manual-hydraulic telescoping profiles with continuous height adjustment. This allows you to adapt table frames or other base frames to the individual user.

Material: Anodised aluminium

Telescoping profiles for manual height adjustment

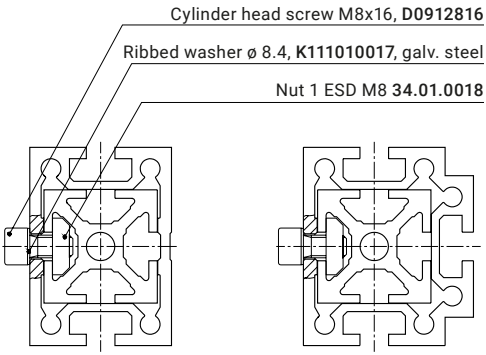

mk 2040.75 and mk 2040.01 (40x40) profiles

mk 2040.74 and mk 2040.01 (40x40) profiles

Telescoping profiles for hydraulic height adjustment

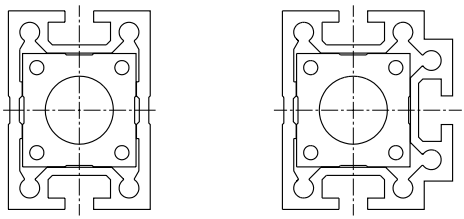

mk 2040.75 and mk 2040.36 profiles

mk 2040.74 and mk 2040.36 profiles

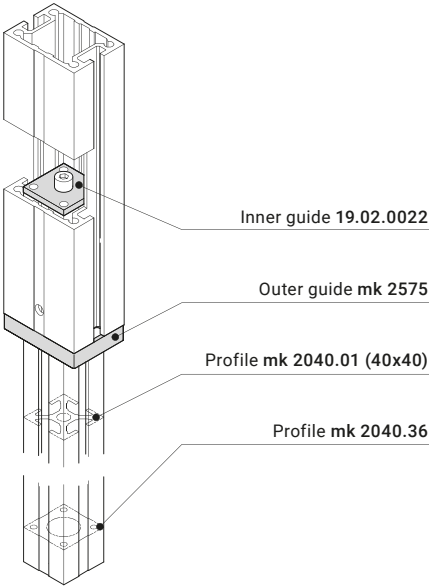

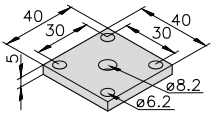

Inner guide
19.02.0022

PA plastic

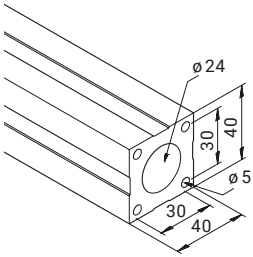

Profile mk 2040.36

2.83 kg/m

Stock length	**54.36.5100**
Cut	**54.36. ....**

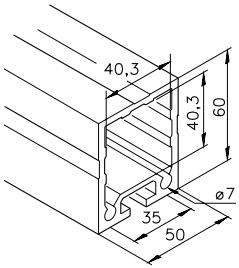

Profile mk 2040.38

2.52 kg/m

Stock length	**54.38.5100**
Cut	**54.38. ....**

Guide
mk 2538

3D-plastic

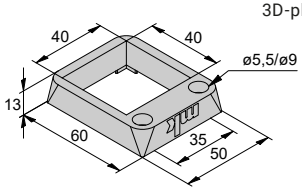

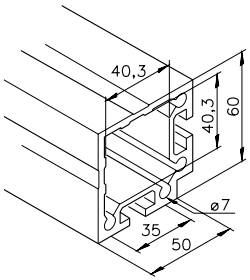

Profile mk 2040.39

3.00 kg/m

Stock length	**54.39.5100**
Cut	**54.39. ....**

Guide
mk 2539

PP-plastic

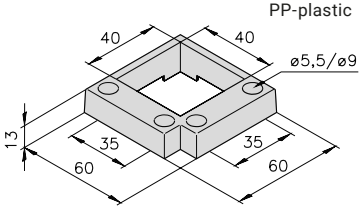

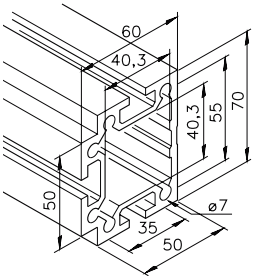

Profile mk 2040.74

3.50 kg/m

Stock length	**54.74.5100**
Cut	**54.74. ....**

Guide mk 2040.74
98.03.0010-G9005

3D-plastic

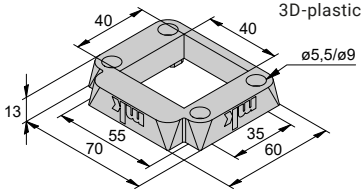

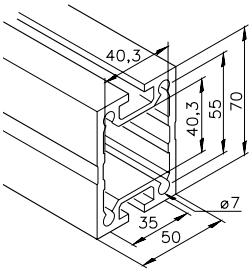

Profile mk 2040.75

3.01 kg/m

Stock length	**54.75.5100**
Cut	**54.75. ....**

Guide
mk 2575

3D-plastic

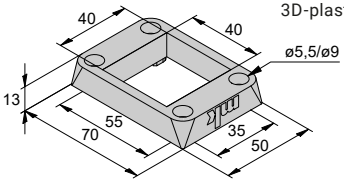

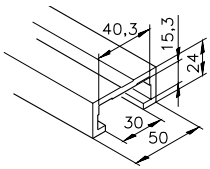

Profile mk 2040.37

1.17 kg/m

Stock length	**54.37.5100**
Cut	**54.37. ....**

Application Profiles for Workstations

Profiles for Table and Machine Frames

The following profiles can be used to build frames for tables, signs, presentation stands, desks, etc.

Material: Anodised aluminium

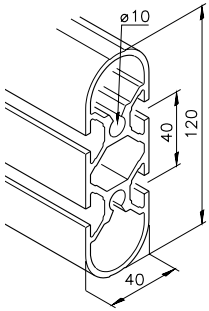

Profile mk 2040.34

3.56 kg/m

Stock length	**54.34.7100**
Cut	**54.34. ....**

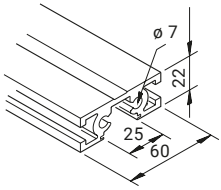

Profile mk 2040.35

1.61 kg/m

Stock length	**54.35.5100**
Cut	**54.35. ....**

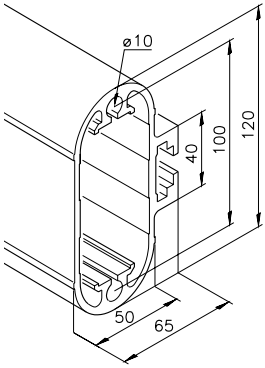

Profile mk 2040.30

4.29 kg/m

Stock length	**54.30.5100**
Cut	**54.30. ....**

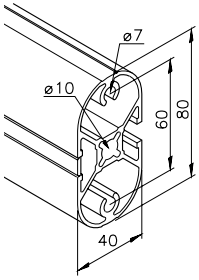

Profile mk 2040.23

2.12 kg/m

Stock length	**54.23.5100**
Cut	**54.23. ....**

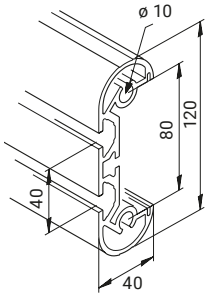

Profile mk 2040.33

3.16 kg/m

Stock length	**54.33.5100**
Cut	**54.33. ....**

Profile for Footrests

The following profile is used to build footrests and can also be used as a stepping surface. The surface of the 2040.70 profile has an anti-slip structure that was specially designed for this purpose.

Material: Anodised aluminium

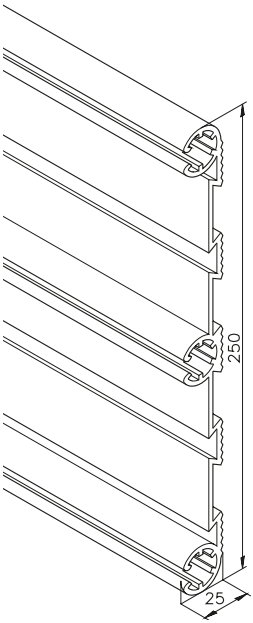

Profile mk 2040.70

3.53 kg/m

Stock length	**54.70.5100**
Cut	**54.70. ....**

8

Section 9 Stairs and Platforms

Notes on Stairs and Platforms 322

Stairs

Notes/Technical Data 324
Stairs 325
Stepladders 325
Side Walls 326
Steps 326
Profiles for Steps 327

Platforms

Notes/Technical Data 328
Assembly Details 329

9

Guardrails

Notes/Technical Data	330
Hinges for Hand Rails	331
Wall Joint	333
T-connection	333
Cap	333

Notes on Stairs and Platforms

9

» Safe access
for safe work. «

With our platforms, we offer custom solutions for safely accessing work areas and performing work on vehicles, machines and systems. The platforms we offer include custom assembly and maintenance platforms, simple standard platforms, and footbridges for use in production areas.

mk platforms are planned and manufactured to order. We take into account the specific conditions on site, such as large heights or the need for extended reach. Appropriate functions are then planned, such as height adjustment, mobile capabilities or integrated rotary joints. By utilising the mk profile system, we can fulfil virtually any requirement in terms of effective area, travel distance or minimum clearance, depending on the specific application.

The size of the platforms can vary from simple footbridges to assembly platforms that are 15 m long and 6 m high. You can construct free-standing bridges of up 6 m.

Benefits of Stairs and Platforms

- Variety of designs and options that fulfil safety requirements and improve workstation ergonomics
- Modular design allows for easy assembly and disassembly using standard tools
- Large selection of configurations provided by the profile system gives us maximum flexibility to implement customer-specific functions
- High material quality, sturdy connection technology and high-quality accessories ensure high load capacities and long service lives
- Compatible modules and removable connection technology allow for easy modifications and additions
- High-quality aluminium profiles for an attractive design
- Mobile designs available with fixed or swivel casters or air cushions

Ergonomics

Safety

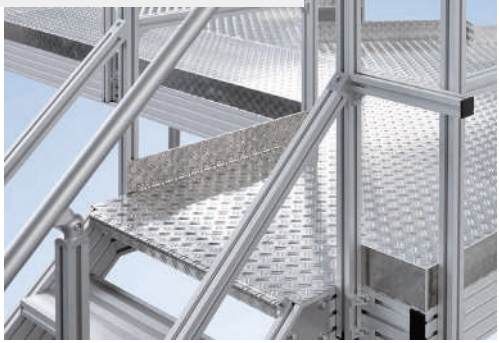

Flexibility

Stairs

Notes/Technical Data

Stairs are made from mk 2040.68, mk 2040.69 and mk 2040.06 (40x160) profiles. The profiles used in the stairs have a slip-reducing surface structure. The screw connections in the T-slots eliminate the need for machining components.

The incline angle and the number of steps are determined according to DIN EN ISO 14122-3. For stairs, the going (g) must be between 210 mm and 310 mm, and the rise (h) and going (g) must satisfy the formula 600 < = g + 2h < = 660. For stepladders, the going (g) must be at least 80 mm and the rise (h) must be between 150 mm and 200 mm for a pitch (α) < = 60°.

For stairs, the rise of the first step (h1) may be reduced by 15% relative to the general rise (h). For stepladders, the rise of the first step (h1) may be reduced by up to 50% of the general rise (h) and raised by 15 mm. For stairs, the going width should be at least 800 mm. For infrequently used stairs, the going width may be reduced to 600 mm; for stair heights up to 1500 mm, the going width may be reduced to 500 mm. For stepladders, the going width (string to string) must be between 500 mm and 800 mm; the preferred going width is 600 mm.

Pitch
Stairs and stepladders can be designed with various pitches depending on the intended function or available space. If the pitch is between 20° and 45° inclusive, it is called stairs; if the pitch is between 45° and 75° inclusive, it is called a stepladder.

The recommended pitch to ensure comfortable stairs is between 30° and 38°. If the available space is limited, you can choose 45° stairs or a 55° or 60° stepladder.

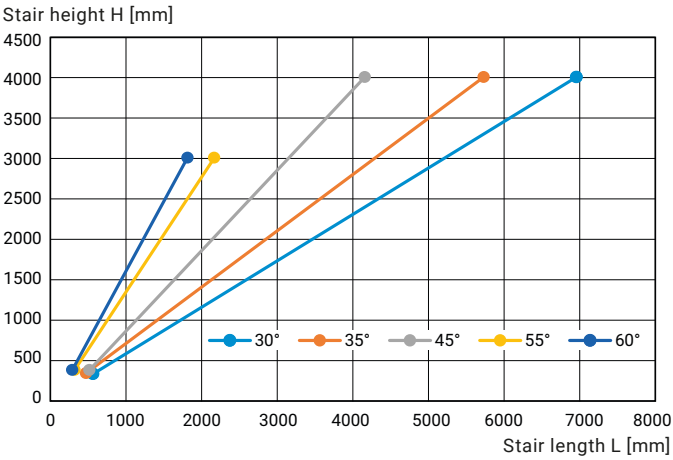

Sample order:
Stair height (H) = 2490 mm
Height of floor structure (d) = 10 mm
Stair width (B) = 880 mm
Pitch (α) = 35°

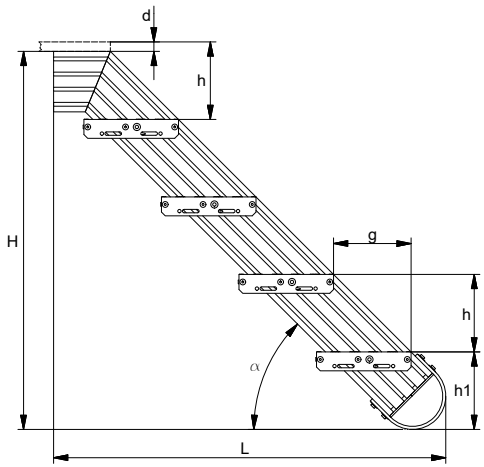

H = stair height (without floor structure)
L = stair length
α = pitch
g = going
h = rise
h1 = rise of first tread
d = height of floor structure

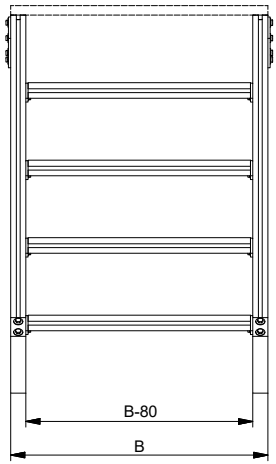

B = stair width
B-80 = going width (string to string)

Stairs

H+d max. = 4000 mm
B max. = 1280 mm

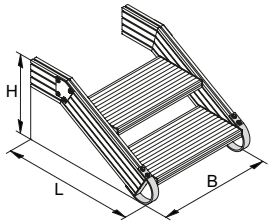

Stairs 30°
B02.31.005

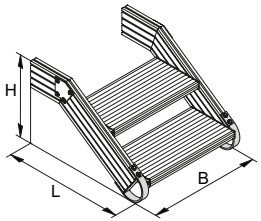

Stairs 35°
B02.31.006

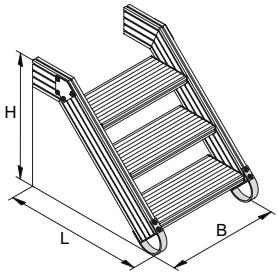

Stairs 45°
B02.31.007

Stepladders

H+d max. = 3000 mm
B max. = 880 mm

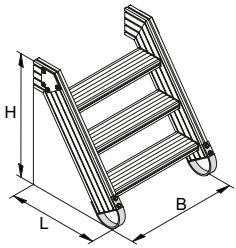

Stepladder 55°
B02.31.008

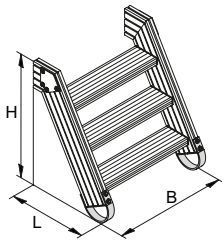

Stepladder 60°
B02.31.009

Side Walls

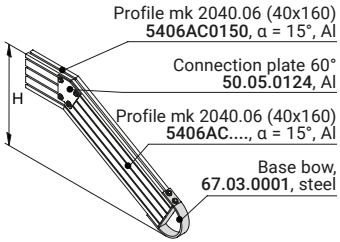

Side wall 40/30°
B02.34.006

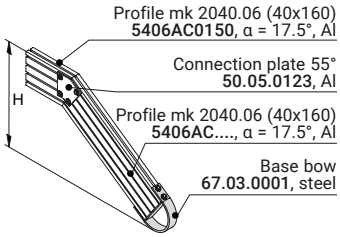

Side wall 40/35°
B02.34.007

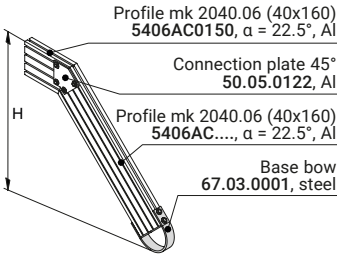

Side wall 40/45°
B02.34.008

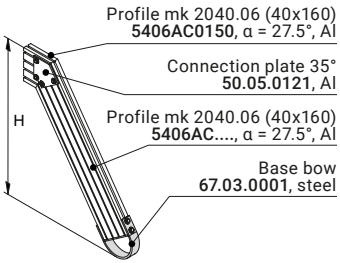

Side wall 40/55°
B02.34.009

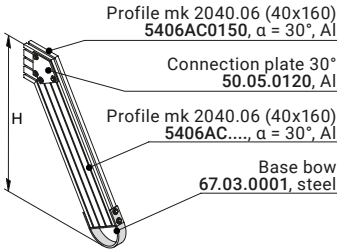

Side wall 40/60°
B02.34.010

Steps

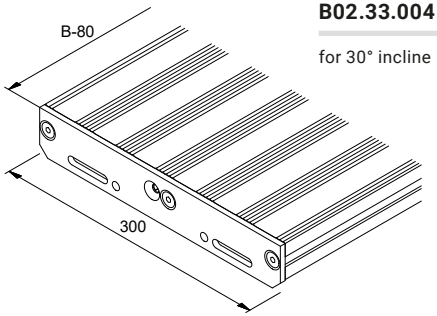

Step 40/300
B02.33.004

for 30° incline

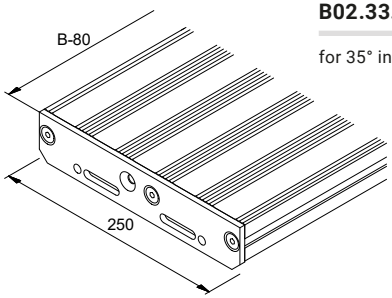

Step 40/250
B02.33.003

for 35° incline

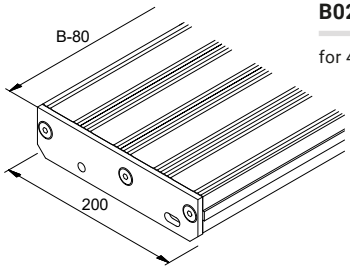

Step 40/200
B02.33.005

for 45° incline

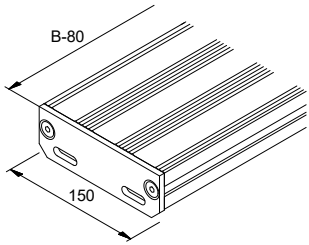

Step 40/150
B02.33.002

for 55° and 60° incline

Profiles for Steps

Special profiles for building steps, machine platforms, walkways and platforms. The profiles can be connected side to side to create large stepping surfaces.

Material: Anodised aluminium

Fastening example

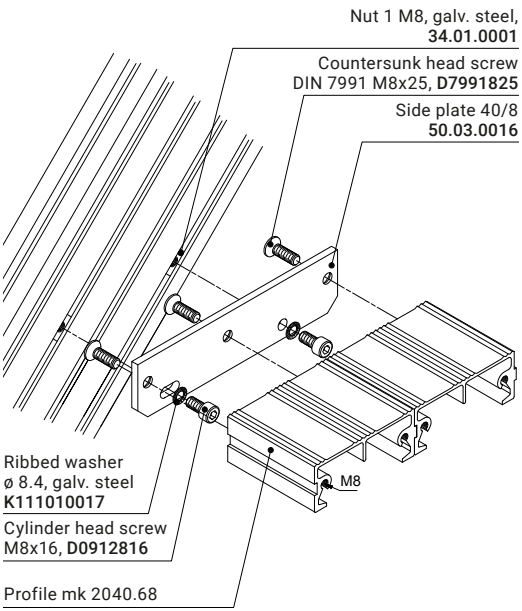

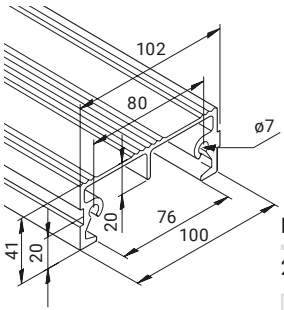

Profile mk 2040.68

2.37 kg/m

Stock length	**54.68.6100**
Cut	**54.68. ....**

End service	Item no.
2 x M8	**5468AB....**

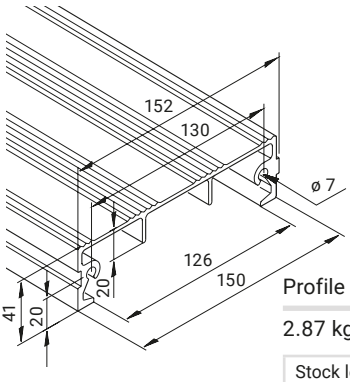

Profile mk 2040.69

2.87 kg/m

Stock length	**54.69.6100**
Cut	**54.69. ....**

End service	Item no.
2 x M8	**5469AB....**

9

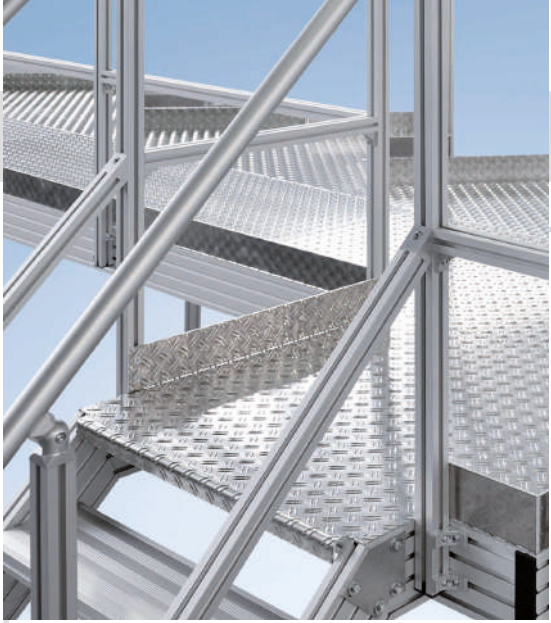

Platforms

Notes/Technical Data

With its four series of profiles, the mk profile system offers nearly endless combinations for constructing platforms. You can achieve span widths of up 6 m. The components listed below are only our basic components.

Platforms are covered with chequer sheets as standard or with profiles on request. For industrial applications, the platform's outer contours are equipped with toe kicks (100 mm minimum height) in accordance with DIN EN ISO 14122-2. Platforms can also have a mobile design, for example with fixed or swivel casters or with an air cushion system.

Panelling
Starting on page 240

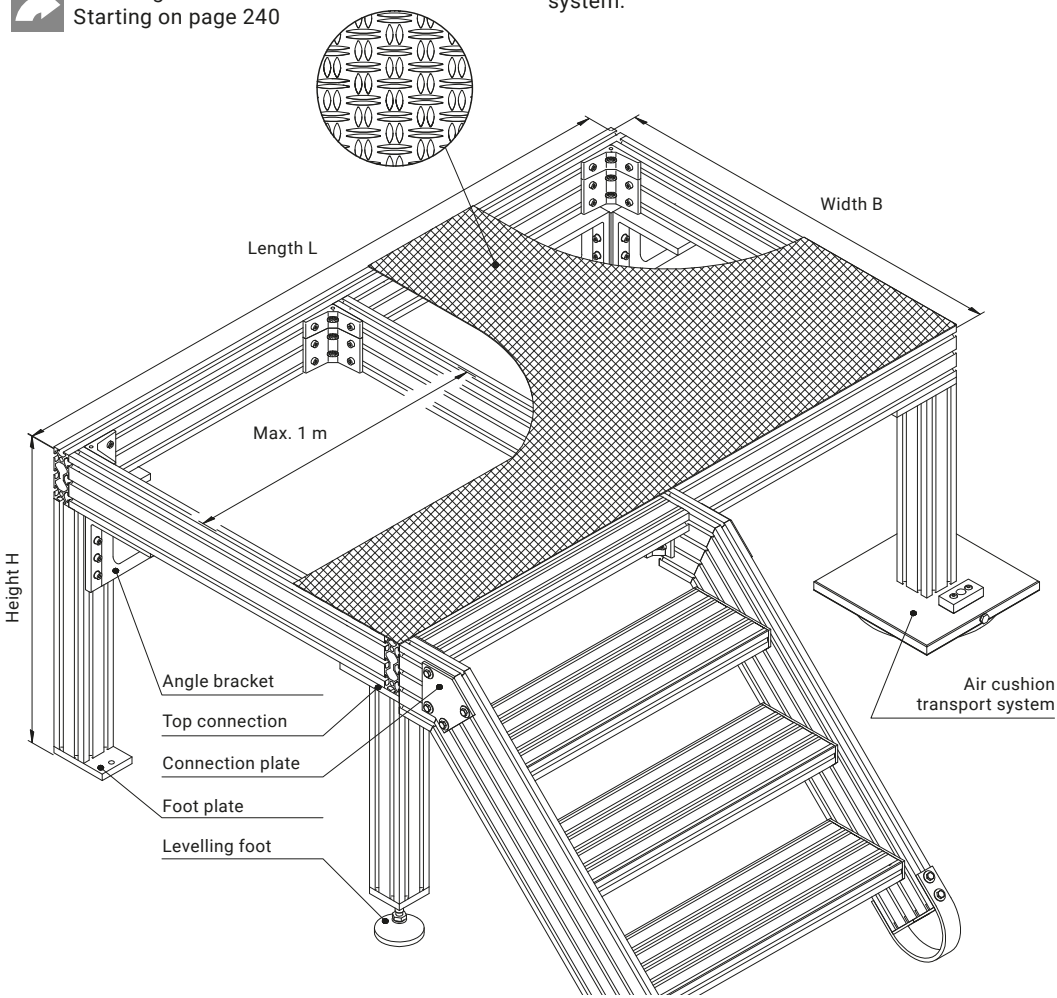

Connection Details

Base plate connection
A base plate is a safe and simple option for connecting the stairs. Three profiles are connected with single element.

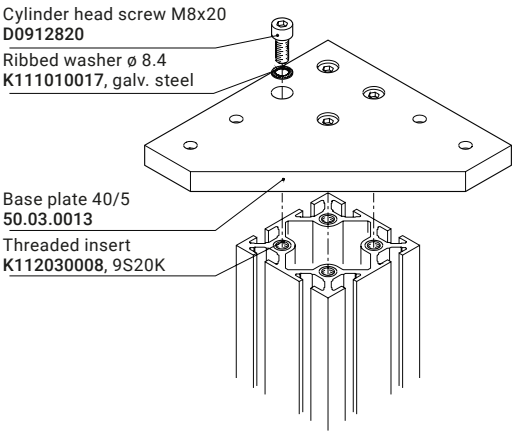

Floor fastening
The Duet chequer sheet can be used as the floor surface as an alternative to floor profiles. It is easily screwed onto the base structure.

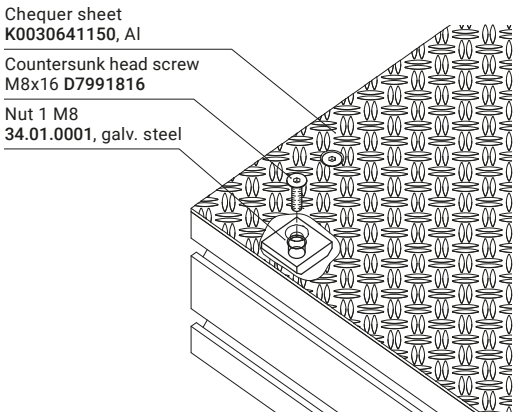

Angle bracket connection
The angle bracket connection option is intended for the most demanding stability requirements. The die-cast aluminium angle brackets have 12 mounting bores and are designed for large span widths.

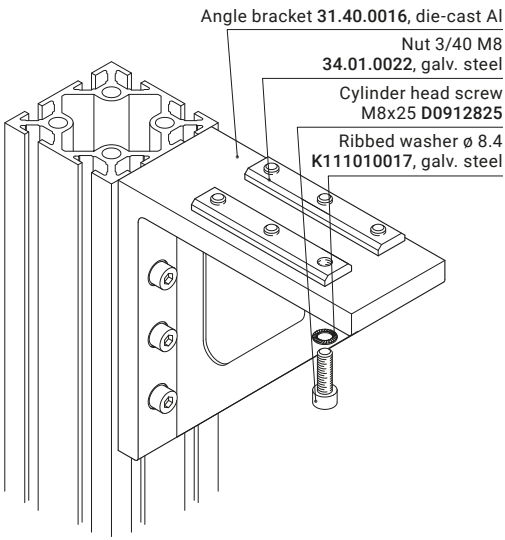

Side wall fastening
The stair's side walls consist of two cut profile sections each that are connected at their mitre-cut ends with a connection plate, allowing the horizontal profile section to be screwed to the platform using angle E80.

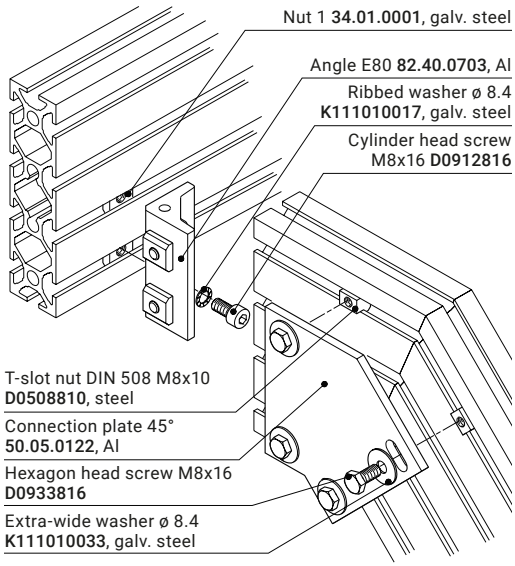

Guardrails

Notes/Technical Data

Guardrails have many applications, such as stairs, work platforms and other platforms. Stairs with four or more steps must have a guardrail.

For steps up to 1500 mm in width, the guardrail must be mounted on the right side in the descending direction. Steps wider than this require a guardrail on both sides.

Knee braces

Guardrails are always equipped with knee braces (cross struts between two rail posts). The distance from the knee brace to the platform floor can be 500 mm at maximum.

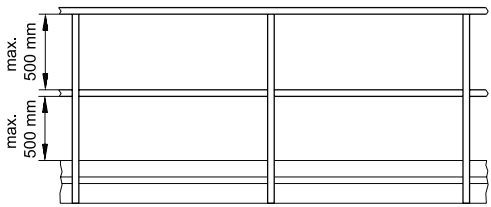

Post spacing

The distance between the posts must be less than 1500 mm. The distance must be chosen so that the guardrail can support a lateral force of 500 N/m.

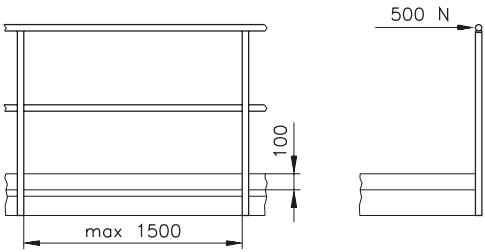

Hand rail

The mk 2040.16 profile has a diameter of 40 mm that complies with the requirements of the DIN EN ISO 14122-3 standard. Both the connection equipment and the end caps of the hand rails have large radii to prevent injuries.

Rail height

Legal regulations specify various minimum heights for guardrails. Guardrails on stairs must be at least 900 mm height, and guardrails on platforms must be 1100 mm.

Toe kicks

Min. height = 100 mm

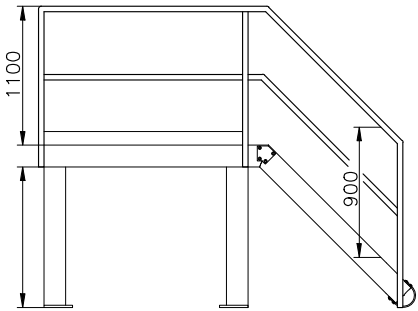

Hinges for Hand Rails

Our lightweight and sturdy hinges for hand rails are always used in combination with mk 2040.01 (40x40) and mk 2040.16 profiles. The hinges are also available in optional surface variants, such as anodised or painted in various RAL colours.

Material: Tumbled aluminium

Fastening example with hinge 40/H5 **B46.01.026**

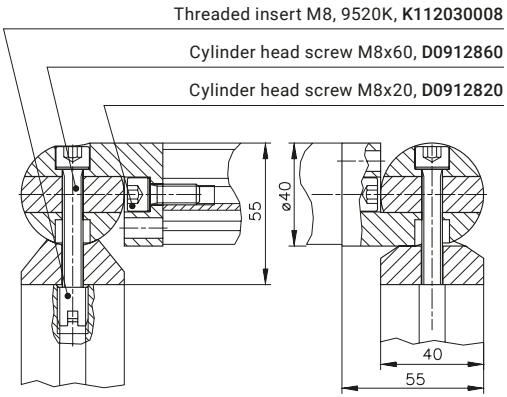

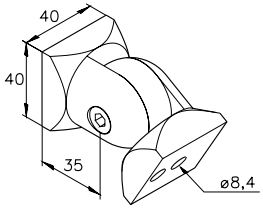

Hinge 40/H1
B46.01.022*

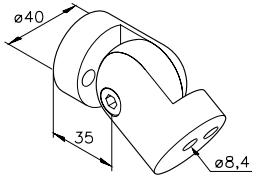

Hinge 40/H2
B46.01.023*

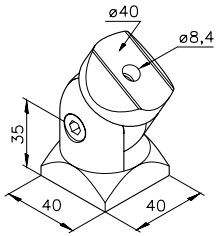

Hinge 40/H4
B46.01.025*

*With fastening accessories

Hinges for Hand Rails

Material: Tumbled aluminium

Fastening example with T-connector

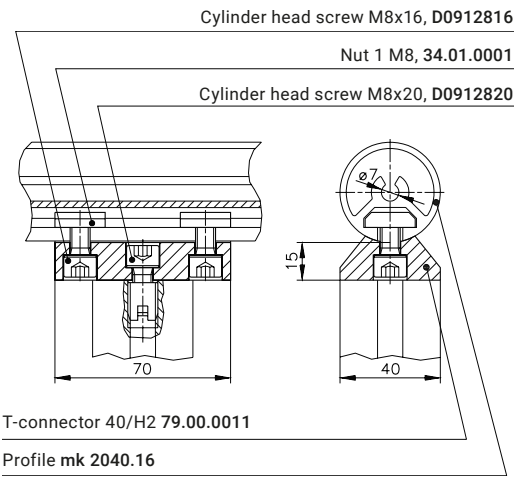

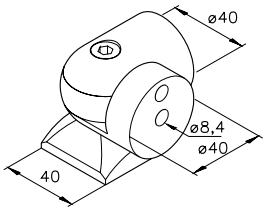

Hinge 40/H5
B46.01.026*

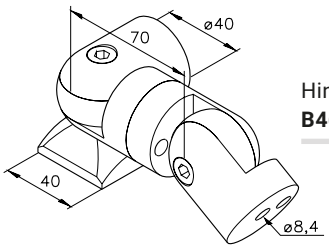

Hinge 40/H3
B46.01.024*

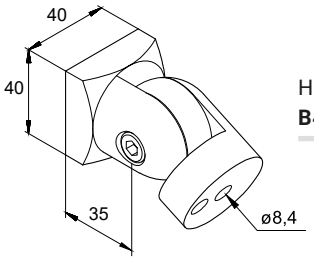

Hinge 40/H6
B46.01.027*

*With fastening accessories

Wall Joint

Material: Tumbled aluminium

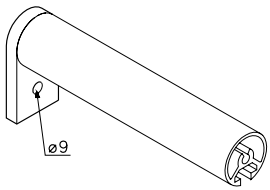

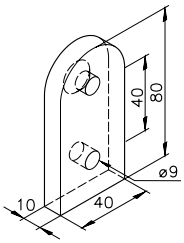

Wall joint
50.03.0034

Cap

Material: Tumbled aluminium

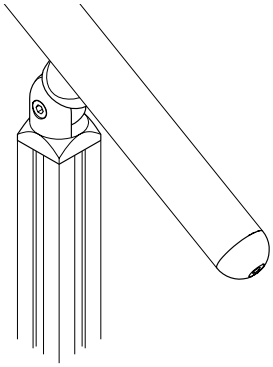

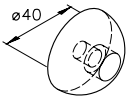

End cap for
mk 2040.16 profile
76.01.0002

T-connection

Material: Tumbled aluminium

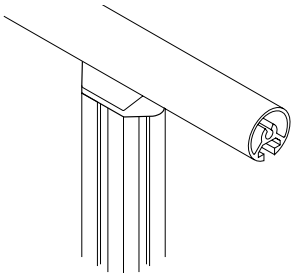

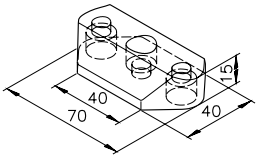

T-connector 40/H2
79.00.0011

9

Section 10 Tools

Drills

Twist Drills 336

Taps and Forming Taps

Taps 336
Forming Taps 336
HELICOIL Taps 336

Installation Tools

Installation Tool for Threaded Insert 336
Installation Tool for HELICOIL 336

10

Allen Wrench Set 337

Magnetic Holders for Nuts 337

Parting Tool for Cleanroom Profiles 337

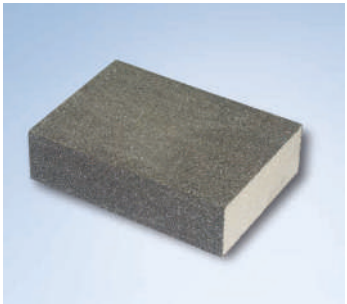

Sanding Sponge 337

Drilling Jigs

Drilling Jigs for Tension Plugs 338

Drilling Jigs for Cleanroom Profiles 339

Drilling Jigs for Pneumatic Components 340

Tools

Drill

Order no.	Type
K903000058	Twist drill, ø 5.8
K903000070	Twist drill, ø 7
K903000080	Twist drill, ø 8
K903000090	Twist drill, ø 9

Taps and Forming Taps

Order no.	Type
K903060005	Tap, M5
K903060105	Tap, M5x0.5
K903070008	Forming tap, M8
K903060008	Tap, M8
K903060108	Tap, M8x1
K903060109	Tap, M9x1
K903060010	Tap, M10
K903060012	Tap, M12
K903060113	Tap, M12x1.5
K903060016	Tap, M16
K903060116	Tap, M16x1.5

Order no.	Type
K903060204	Tap, (HELICOIL) M4
K903060206	Tap, (HELICOIL) M6
K903060208	Tap, (HELICOIL) M8
K903060210	Tap, (HELICOIL) M10

10

Installation Tool for Threaded Insert

Order no.	Type	Thread	Length
K902010004	H	M3	58 mm
K902010005	M	M3	82 mm
K902010008	H	M5	69 mm
K902010009	M	M5	101 mm
K902010010	H	M6	74 mm

Order no.	Type	Thread	Length
K902010011	M	M6	102 mm
K902010012	H	M8	81 mm
K902010013	M	M8	105 mm
K902010016	H	M12	95 mm
K902010017	M	M12	118 mm

Type H = manual, type M = automatic

Installation Tool for HELICOIL

Order number	Type	Thread
K902010204	H	M4
K902010206	H	M6

Order number	Type	Thread
K902010208	H	M8
K902010210	H	M10

Type H = manual

Allen Wrench Set, long version

The ball side is used for quick and easy turning of the screw. When tightening, the long key side provides the necessary tightening torque. The wrenches are made of high-quality chromium-vanadium steel.

Order number	Type
K902005050	Wrench set, 9 pieces

Magnetic Holders for Nuts

Strong magnetic lifting device with flexible brass hose and black plastic handle, chrome-plated surface, for holding nuts in inaccessible vertical slots.

Order number	Type
K901130001	Magnetic lifting device

Parting Tool for Cleanroom Profiles

For cutting or exposing slots (10 mm) in cleanroom profiles.

Order number	Type
B46.03.102	Parting tool

Sanding Sponge

For smoothing the sharp edges of the exposed slots created by the parting tool.

Order number	Type
K902030001	Sanding sponge

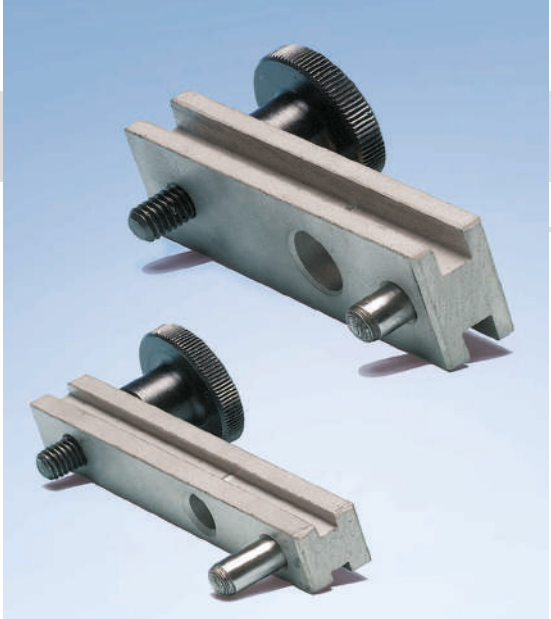

Drilling Jigs for Tension Plugs

Drilling jigs are used to precisely drill bores for tension plugs. The ø 6 drilling jig is used for B51.03.009 tension plugs and the ø 10 drilling jig is used for B51.03.004, B51.03.040 and B51.03.041 tension plugs.

Material: Hardened steel

For internal fasteners, see from page 106

Fastening example

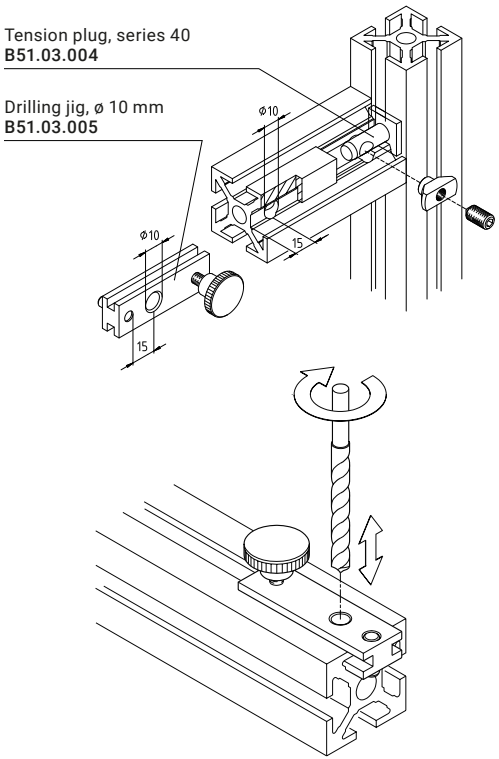

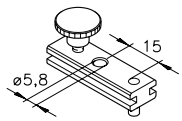

25 40 50 60

Drilling jig
B46.03.003

ø 6 mm

A=15 mm

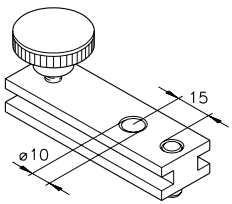

25 40 50 60

Drilling jig
B51.03.005

ø 10 mm

A=15 mm

Drilling Jigs for Cleanroom Profiles

Drilling jigs with hardened steel bushings are used to drill bores in the closed slot of cleanroom profiles so that they can be mounted with the standard connectors.

Material: Tumbled aluminium

For cleanroom profiles, see from page 56 (Series 40) and page 66 (Series 50)

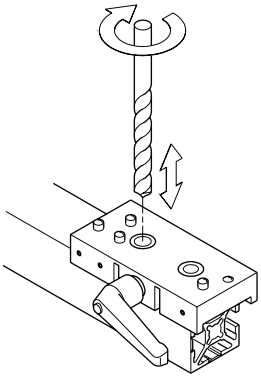

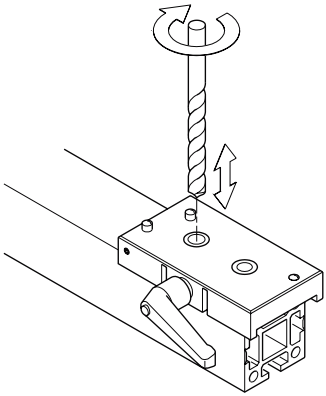

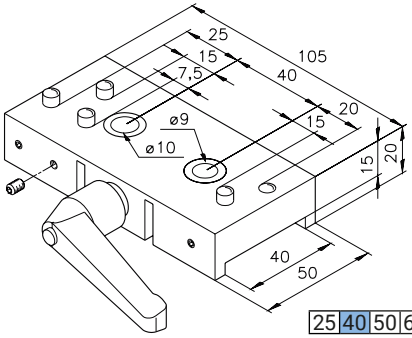

25 | 40 | 50 | 60

Drilling jig
Cleanroom 40
B51.03.020

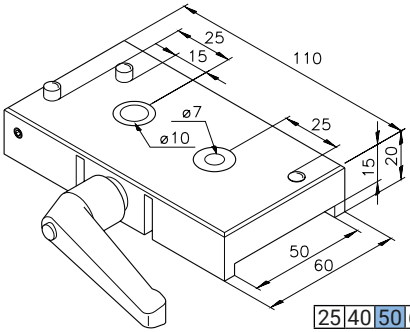

25 | 40 | 50 | 60

Drilling jig
Cleanroom 50
B51.03.035

Drilling Jigs for Pneumatic Components

Drilling jigs with hardened steel bushings are used to drill bores in the mk 2040.02 and mk 2040.03 profiles for attaching pneumatic connections. This allows the profiles to be used as a compressed air line together with pneumatic components.

Material: Tumbled aluminium

Pneumatic components starting on page 205

25 **40** 50 60

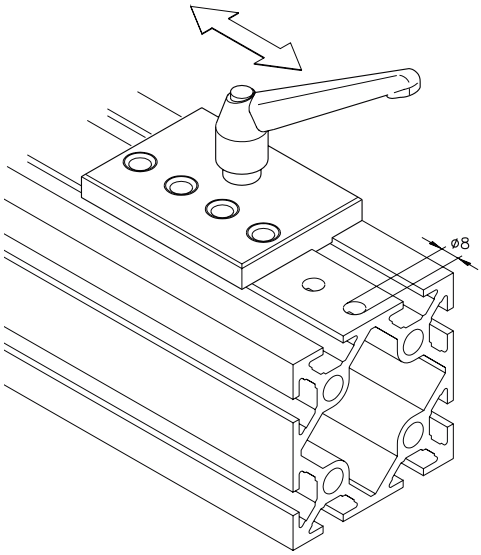

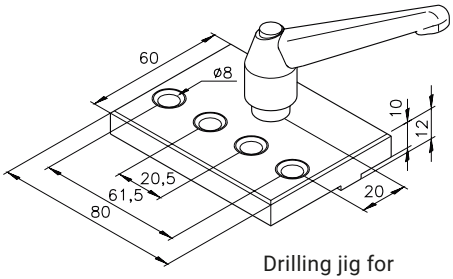

Drilling jig for pneumatic components
B46.03.007

Application Examples with Instructions for Mounting

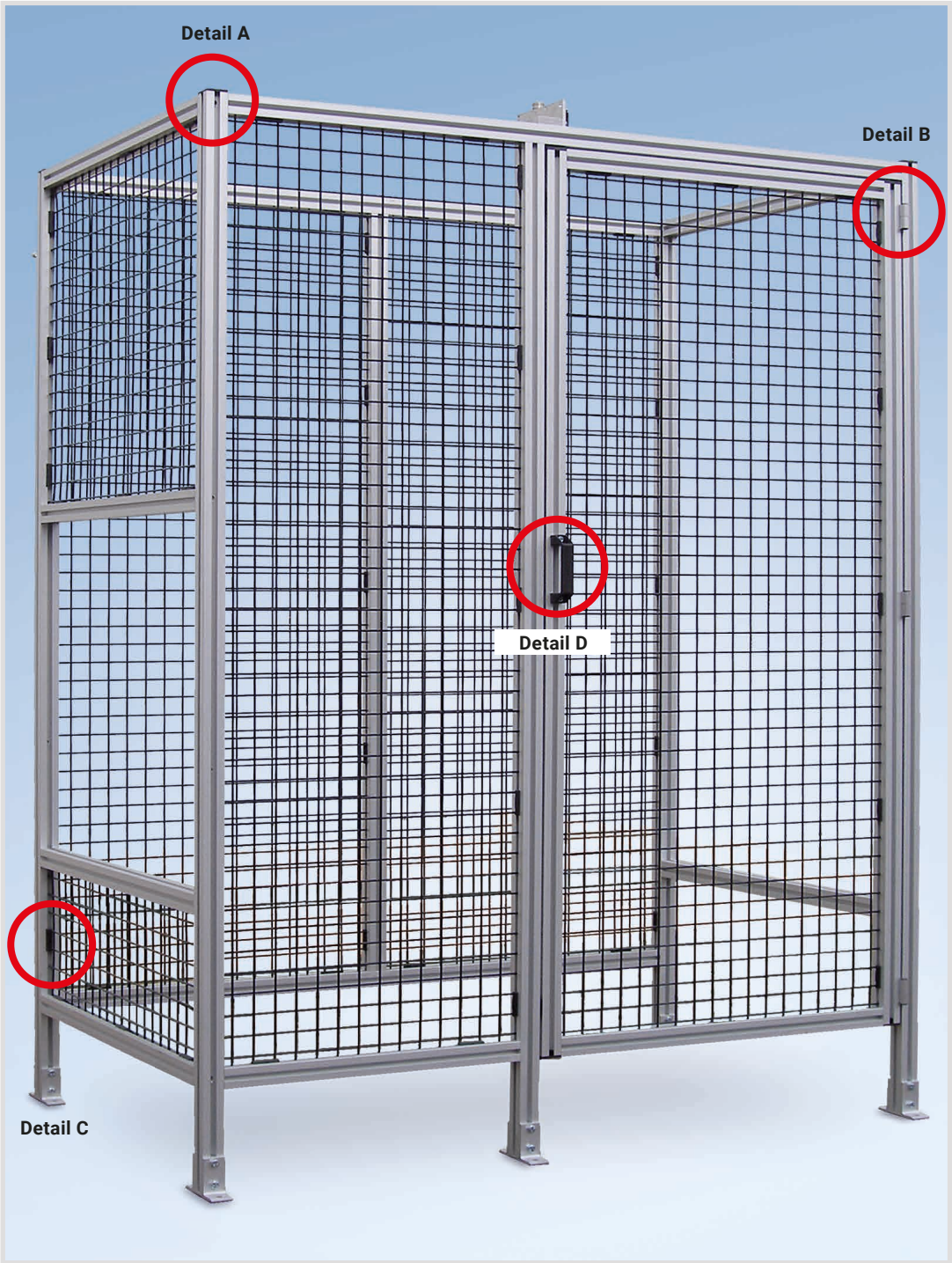

Detail A

➔ Page 110

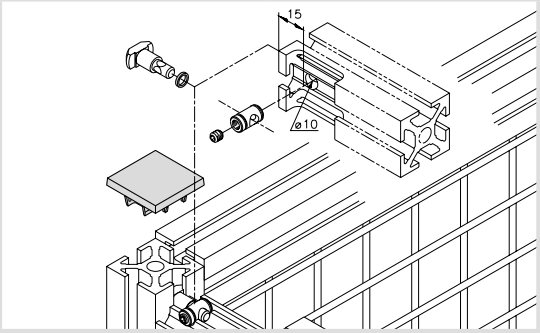

Tension plug

B51.03.040

This connection requires a ø 10 mm through-bore 15 mm from the edge. Use the Series 40 drilling jig B51.03.005. After you insert the bolt in the bore, guide the tension plug into the profile's face and secure it by gently tightening the set screw. The traverse can now be connected to another profile in any position you wish.

Detail B

➔ Page 257

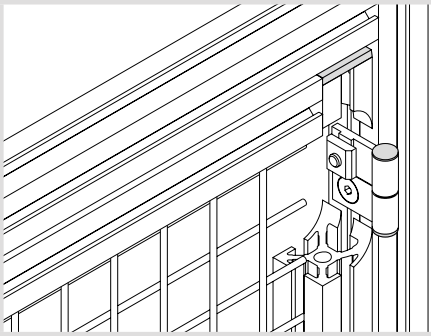

Hinge 40-1/40-1

B46.01.010

A hinge is mounted between two profiles using countersunk head screws and nuts that fit the particular profiles series. The fastening accessories you need are included in the set. The keys on the hinge leaves ensure that the components are parallel.

Detail C

➔ Page 252

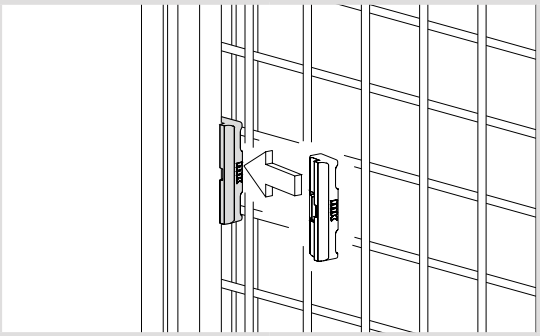

Fence clip

mk 2544

Fence clips can be used to quickly mount welded grids onto Series 40 profiles. You simply hammer the clip into the profile slot. To adequately secure the welded grid in the profile frame, the fence clips should be a maximum of 200 mm from the corners and 520 mm from each other.

Detail D

➔ Page 261

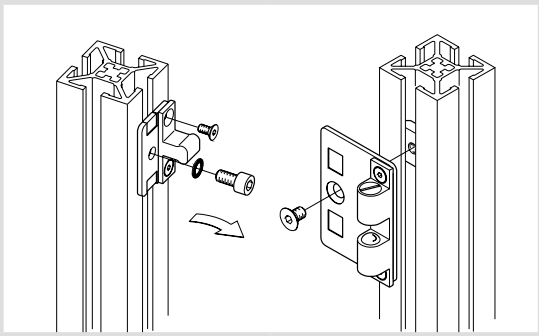

Ball latch

B68.02.101 for 5 mm door gap and
B68.02.102 for 24 mm door gap

Ball latches are a simple and affordable option for locking doors that do not require safety interlocking. They are easily installed with screws and nuts.

Protective Device Guard with Lifting Door

Detail A

➔ Page 228

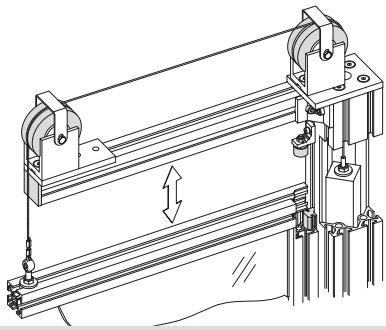

Simple lifting door

B69.62.001

Simple lifting doors consist of a solid partition and a lifting element, which is balanced using steel cables that are connected to counterweights via idler pulleys. This lets you easily lift and lower the door manually. In this example, the lifting door is designed as a corner element. The counterweight disappears elegantly inside the post.

Detail B

➔ Page 254

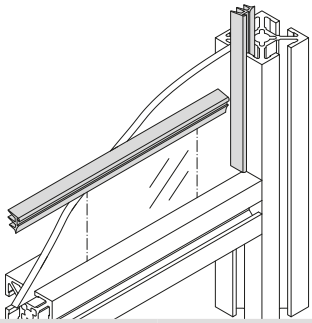

Panelling with sealing strip

mk 3020

An acrylic glass pane was used as panelling here. It serves as separating guarding and is fitted with a positive connection in the T-slot. To fix the pane, a sealing strip is subsequently pressed into the gap between the profile and the panelling from above. It can be cut easily using scissors.

Detail C

➔ Page 274

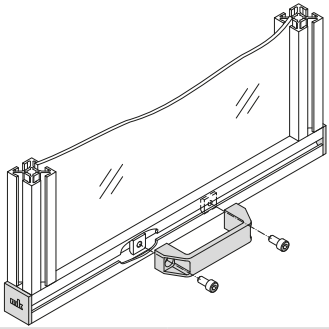

Handle

The universal and robust plastic handle shown here is simply screwed into the 10 mm T-slot. It can be moved in the slot such that the lifting door can be opened and closed easily. This short handle is used in particular for one-handed operation.

Detail D

➔ Page 80

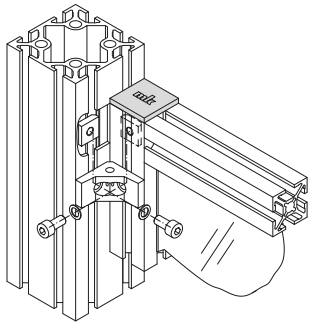

Angle E25

82.40.0701

The Eco solution (p. 221) was used here. The Eco partition was screwed directly to the support post using an angle. The Eco solution is suitable for short partitions and on-site adjustment.

Workbenches with roller conveyors for material feed and removal

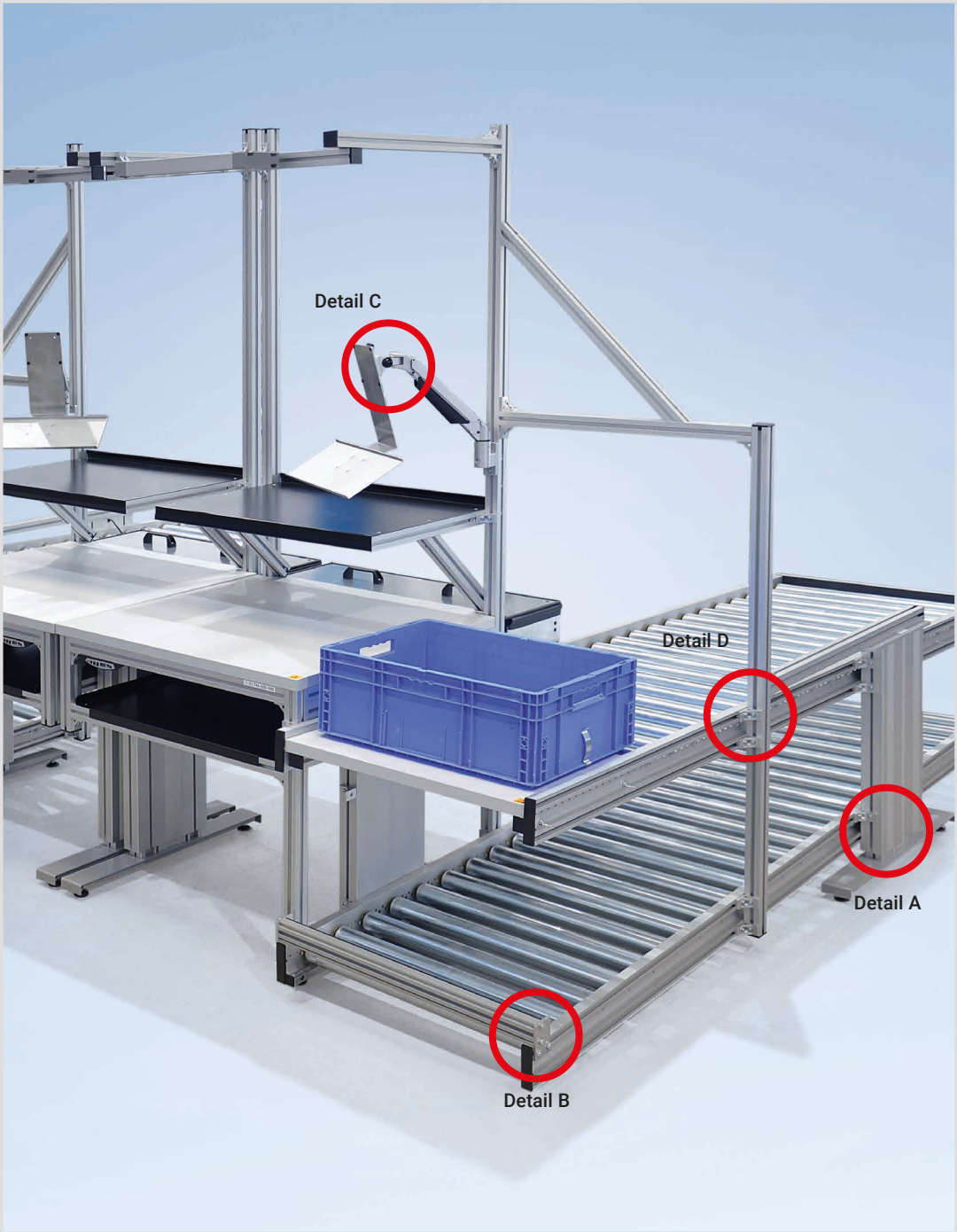

Detail A

➔ Page 287

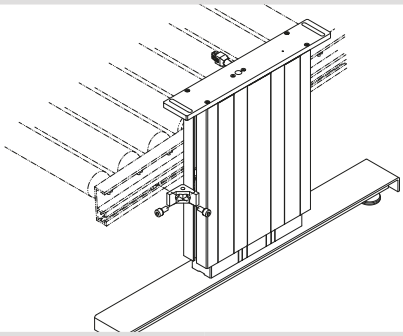

Electrical height adjustment

In this case, the electrical height adjustment of the table frame J1, consisting of Series 40 mk profiles, was screwed to a gravity roller conveyor. This means that the height of the workbench and roller conveyor can be adjusted together electrically. This allows the ergonomic working height to be easily adjusted using a button, with an additional memory function available as an option.

Detail B

➔ Page 298

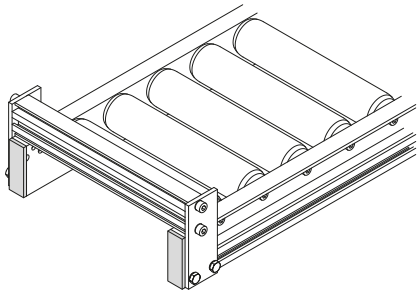

Gravity roller conveyor RBS-P 2065/2066 with end stop

B61.00.003 and B66.00.003

At this picking station, the empty boxes are fed to the lower level via the gravity roller conveyor. They run against the end stop from which the boxes can be removed and placed on the loading rack on the upper level. The loaded box continues over the inclined plane until it reaches the end stop for removal.

Detail C

➔ Page 302

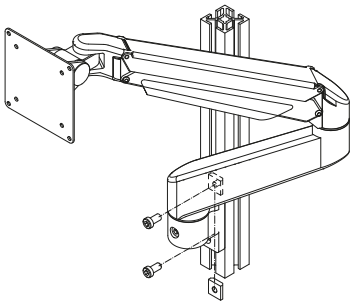

Monitor mount, five-axis, height adjustable

K120000118

The monitor mount with included mounting plate and flange can be attached to vertical or horizontal profiles or to surfaces. It is extremely flexible, with five axes, height adjustment, and 360-degree monitor swivel. It is suitable for VESA-compatible monitors (VESA 75 and 100).

Detail D

➔ Page 143

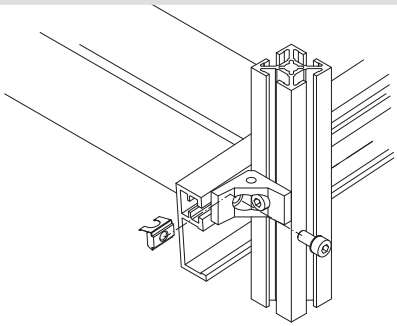

Angle with ESD swivel-in nut 1 M8

34.16.0831

The swivel-in nut 1 is suitable for retrofitting. The spring sheet holds the nut in position even in the vertical installation position. It is also suitable for use as an ESD protection component, thereby meeting the ESD protection concept required in this application.

Protective Device Guard for Cleanroom

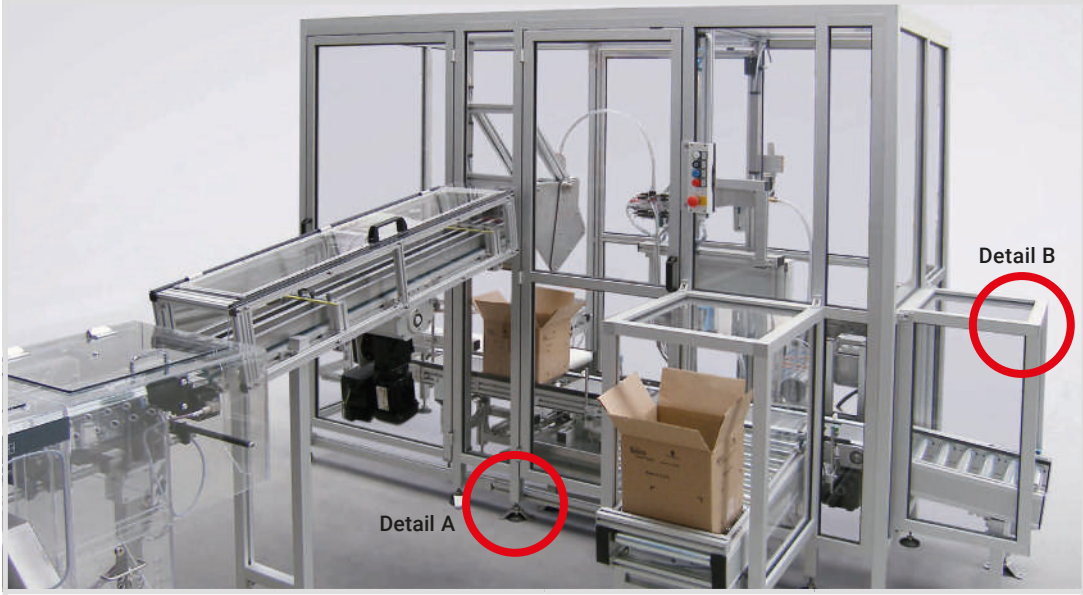

Protective device guard for applications in the cosmetics industry. Because of the stringent sanitary requirements, the machine housing was built from Series 40 cleanroom profiles with closed profile slots. Scratch-resistant Makrolon was used as the panelling material to provide an unobstructed view of the packaging station. Stainless steel levelling feet were also used, which are ideal for the conditions mandated by the sanitary regulations.

Detail A ➔ Page 172

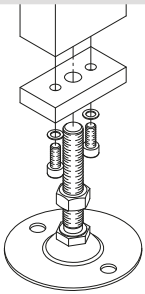

Stainless steel levelling feet

B67.02.081

Stainless steel levelling feet are ideal for use in cleanrooms or for meeting FDA requirements. The foot's domed shape also ensures that liquids will run off. The height adjustment and swivel range allows the levelling foot to compensate for height differences and uneven surfaces. In addition, they can be anchored to the floor.

Detail B ➔ Page 57

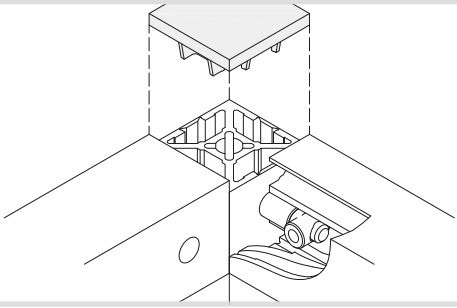

Cleanroom profiles with silver end caps

mk 2040.96 (40x40) profile with mk 2507SI end cap

The caps match the matte silver colour of the anodised profiles to fit discretely into your overall structure. They are made of sturdy injection-moulded plastic and close the profiles' faces to protect against damage and provide seamless transitions at the edges.

Protective Device Guard for Measuring Station

The system's gripping and transfer station is safeguarded using panel frames with welded grids in a custom RAL colour all around the station. The in-feed area and the measuring cell are protected by panel frames with polycarbonate and cover panels. A space-saving folding door is installed in addition to the swing door.

Detail A

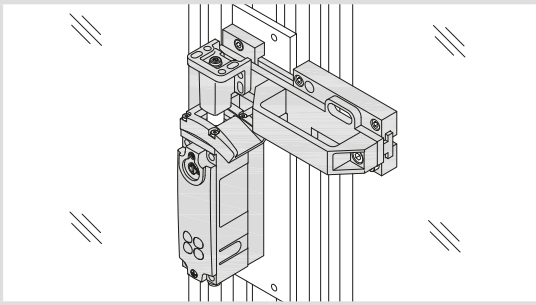

Safety interlock

Safety interlock with tower bolt, folding door locking device, reliable lock monitoring and integrated CES-AP electronics. This interlock does not require a special evaluation unit. The interlock meets safety category 4 and PL e according to EN ISO 13849-1 when installed horizontally, i.e. with the top facing downwards. It has two failsafe semiconductor outputs and an OUT signal output, in addition to clocked safety outputs.

Detail B

➔ Page 190

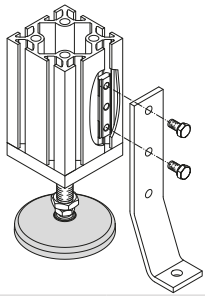

Levelling foot with retaining angle 1

26.00.0006

The retaining angle is used to securely fix the frame to the floor. It is particularly suitable for use with floor anchors. The double swivel-in nut is used for retrofitting. No end machining is required on the profile itself for fastening.

Protective Device Guard with Drawers for Manual Removal

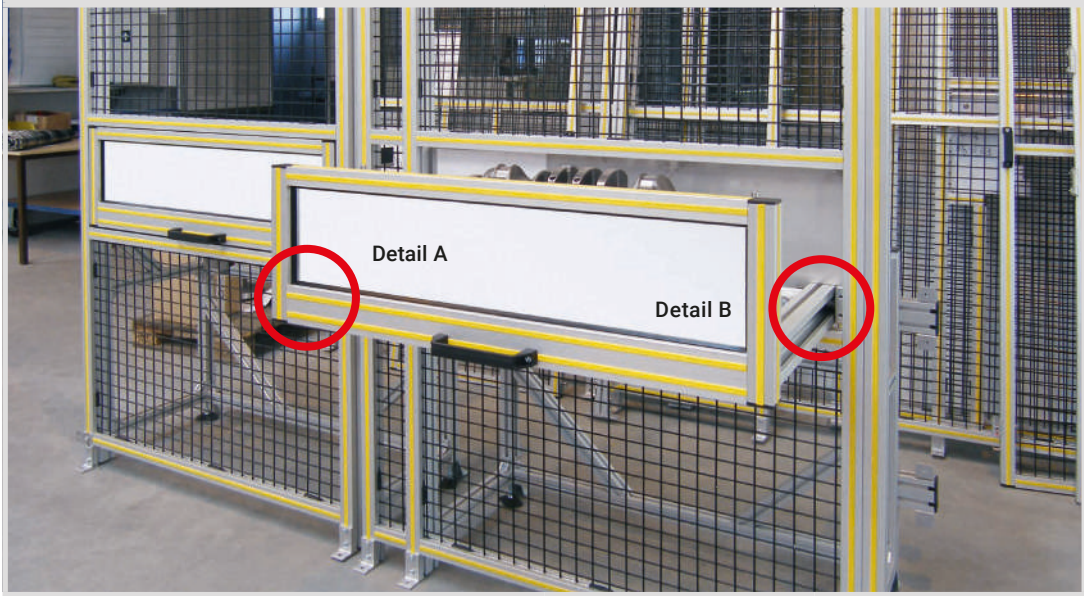

Protective device guard around a measuring station for crankshafts, built using partitions with welded grids. The front partitions are equipped with a drawer with full extension for manual removal of the parts. The back side of the drawer therefore closes off the protected area while the part is being removed, which means the process does not have to stop.

Detail A ➔ Page 156

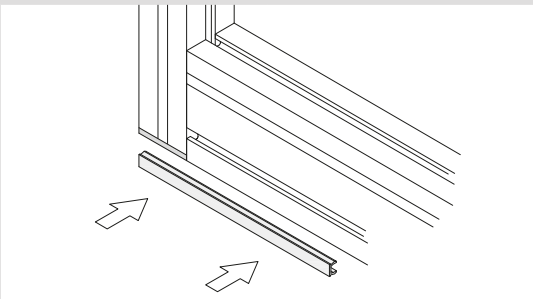

Closure strips

mk 3015

The open slots in the mk 2040.40 (40 x 40 mm), mk 2040.41 (40 x 80 mm) and mk 2040.45 (80 x 80 mm) profiles are closed using closure strips in a custom yellow colour in use at the customer's factory. The closure strips prevent dirt from getting in the slots. Various colour standards from mk allow for accents that are adapted to the customer's requirements.

Detail B

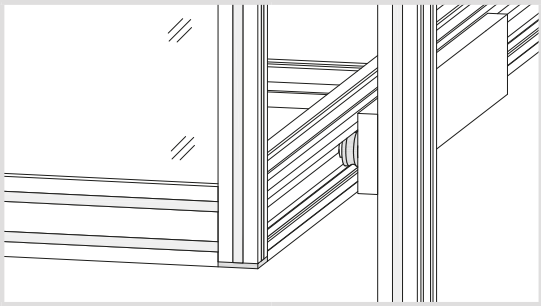

Drawer with track roller assembly

Profile guide B51.04.142

The drawer's track roller assembly is built from an interior profile guide (PF-10-38.77) with a ø 10 mm guide rod. The roller carriage (LW 38.77-44) is fixed to the frame. Low rolling resistance allows easy opening and closing. The simple and sturdy design requires low maintenance and exhibits low wear.

Protective Device Guard with Sliding Doors

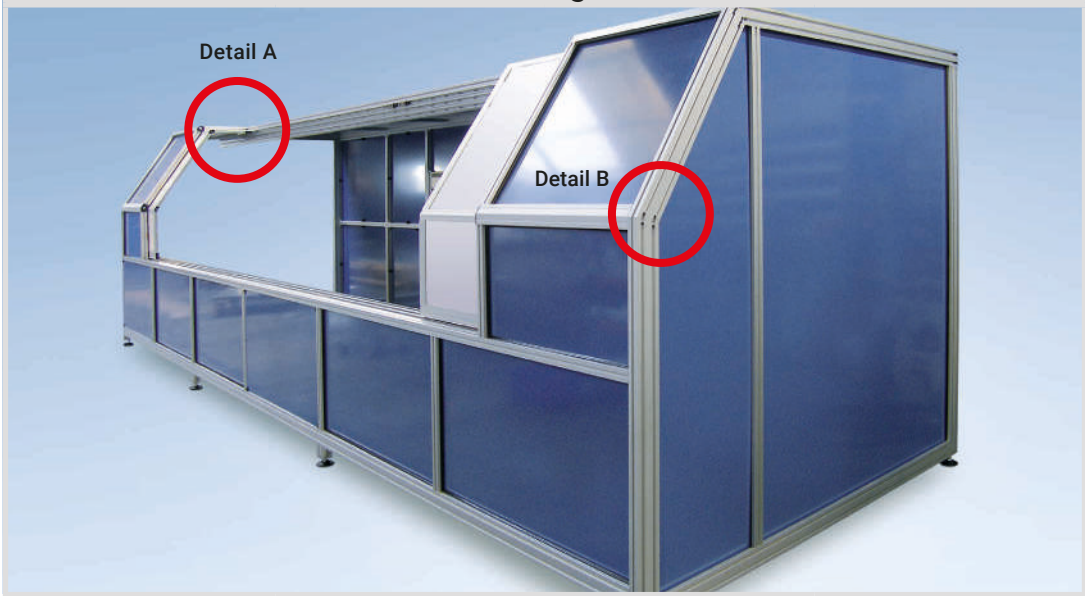

A machine housing was built for a manual lathe. The shape and appearance of the guarding needed to be adapted to the lathe. The housing was completely closed off using sheet panels to prevent chips and drilling fluid from getting into the production hall. Two separately controlled sliding doors allow easy access and operation of the machine. Optionally, the sliding doors can be driven electrically using a timing belt.

Detail A

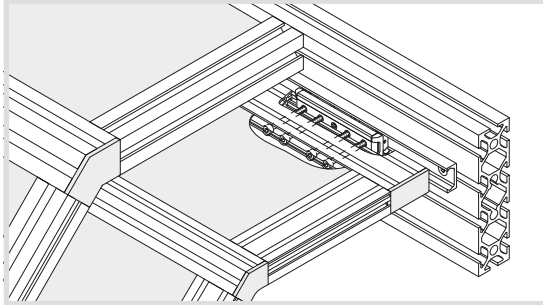

Sliding door with guide rail

The cover can be moved telescopically like a sliding door. To ensure that the cover can be moved easily, it is mounted on rollers at the top and bottom that run in a guide.

Detail B

➔ Page 116

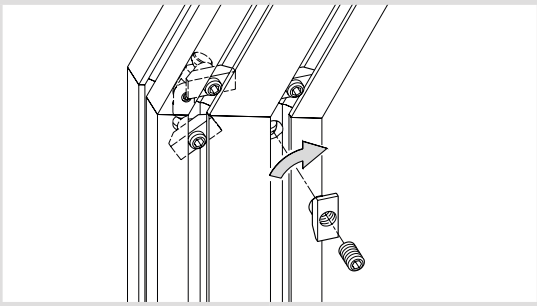

Swivel clamp connector

B51.03.011

Hinge tension plugs allow the connection of mitre-cut Series 40 profiles. All connection angles from 0° to 90° are possible. The connection requires a single-sided ø 10 mm bore in both profiles on the chamfered side, 15 mm from the centre of the cut edge.

Application Examples with Instructions for Mounting

Protective Enclosure with Swing Doors

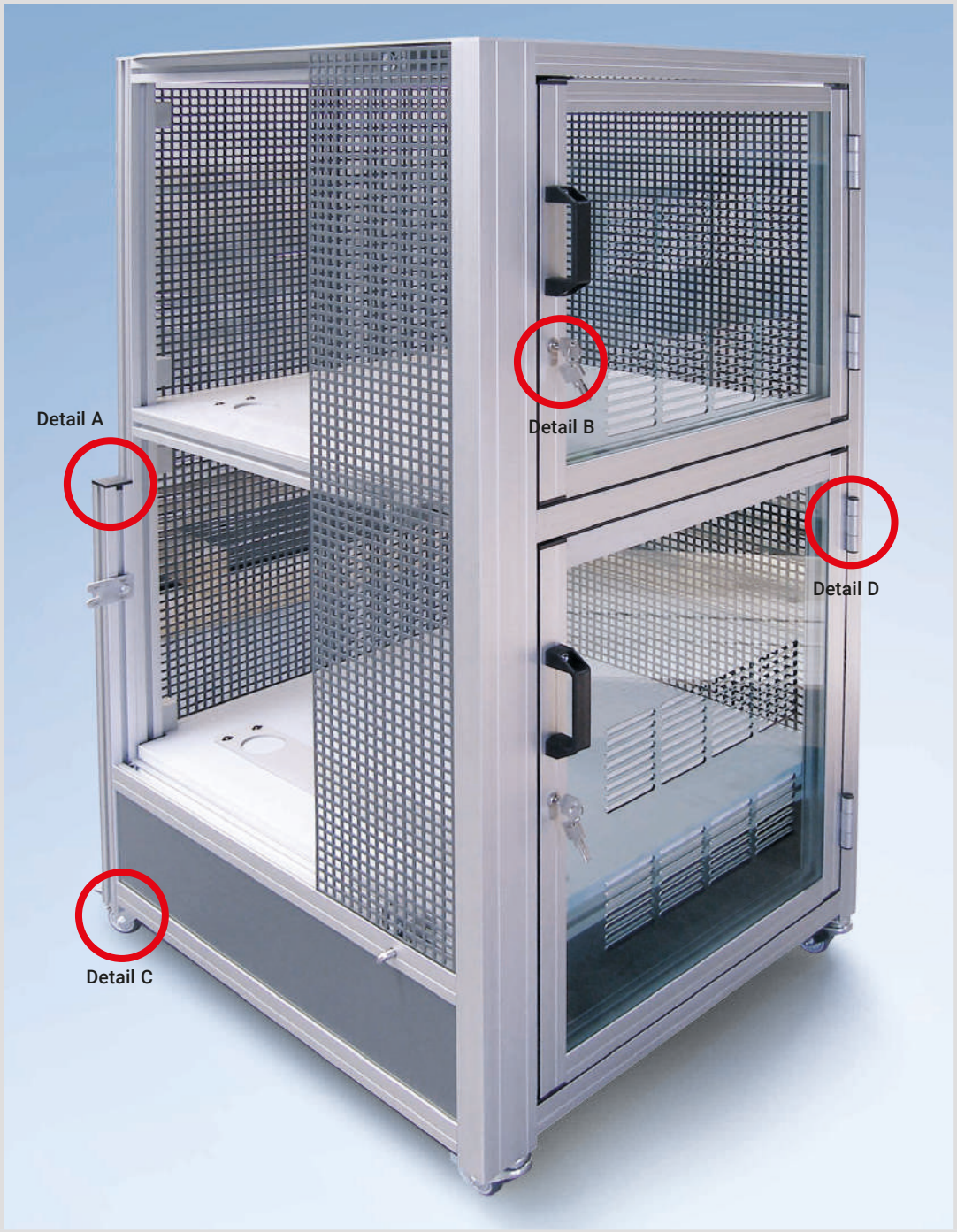

11

Detail A

➔ Page 119

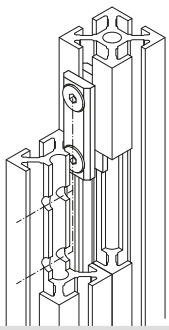

Parallel connector 2/40

B51.03.056

Parallel connectors made from a countersunk nut, screws and a standard nut can be used to create a gap-free connection between two profiles. The swivel-in nut with spring sheet is beneficial for vertical mounting or retrofitting. As an alternative method of fastening, two M8x35 cylinder head screws can be screwed through the profile from the outside – with the appropriate end machining.

Detail B

➔ Page 263

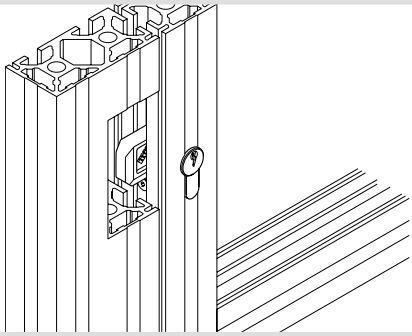

Cylinder lock

B68.02.051

The lock is designed for installation in the mk 2040.01 (40x40) and mk 2040.40 (40x40) profiles. This requires profile services 5401BC or 5440BC. Both the total length of the profile and the distance from the bottom end of the profile to the bottom edge of the lock must be specified. To install the lock, the profile cylinder is pressed through the profile opening into the swivel bolt and then secured using a screw and nut connection.

Detail C

➔ Page 192

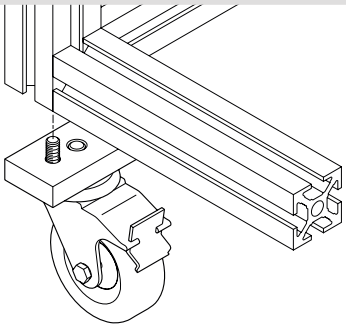

Fixed and swivel casters

K106001041 and K106000141

The casters are attached in the centre of the foot plate that matches the profile (foot plate I M10 in this case) using an M10 hexagon head screw. The casters have a load capacity of 600 N. The swivel casters have a locking device.

50.02.0041 foot plate I M10

Detail D

➔ Page 257

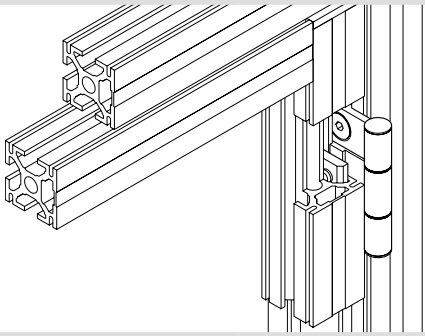

Hinge 40-1/40-7/40-1

B46.01.030

The hinge is mounted between two profiles using countersunk head screws and nuts that fit the particular profiles series. The fastening accessories you need are included in the set. The keys on the hinge leaves ensure that the components are parallel. The use of three hinge leaves means that the door cannot be unhinged and removed without removing the hinge.

Customer-specific kanban shelf

Here, support plates are removed from the kanban shelf according to the first-in-first-out principle. The empty support plates are returned vertically to save space. This kanban shelf is extra long to achieve the required storage volume. The frame is extremely solid so that it can safely hold the relatively high loads.

Detail A ➔ Page 299

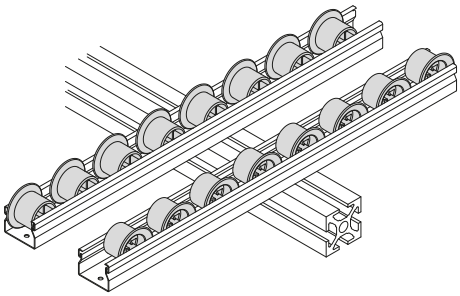

Roller strips with flanged rollers

K1200535FGE. ....

Roller strips are mainly used in carton flow racks to reliably transport boxes. The rollers are made from a thermoplastic material that is resistant to impacts and breakage. Empty boxes are removed, and gravity causes full boxes to slide into place automatically so that the supply of materials is not interrupted.

Detail B ➔ Page 40

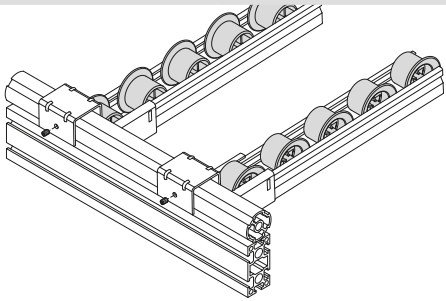

Series D28 round tube profiles with 35/28 L holder for roller strip

Profile mk 2279 and K12005Z0002

The 35/28 L holder for the roller strip was combined with the D28 round tube profile for this application. This allows the angle to be freely adjusted. The rollers are positioned lower here so that the round tube profile serves as a retainer.

Kanban Shelf – for Manual Product Removal

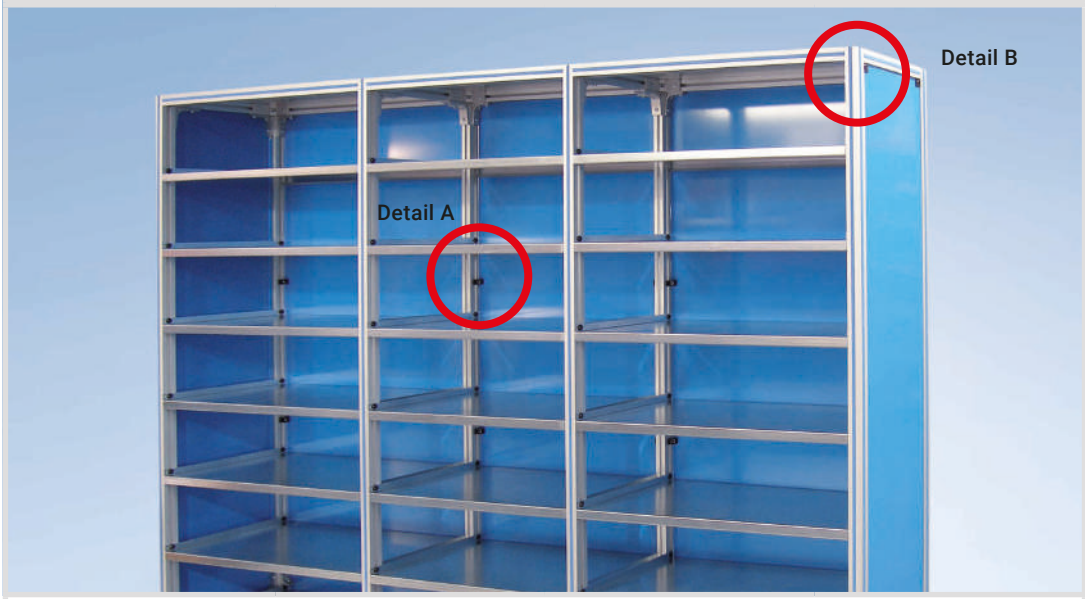

Each kanban system also uses kanban shelves that do not require constant restocking. Stocking from the rear side was therefore not required. The shelf is for items that are used infrequently during the assembly process, which are best stored in this shelf with plenty of storage space.

Detail A ➔ Page 248

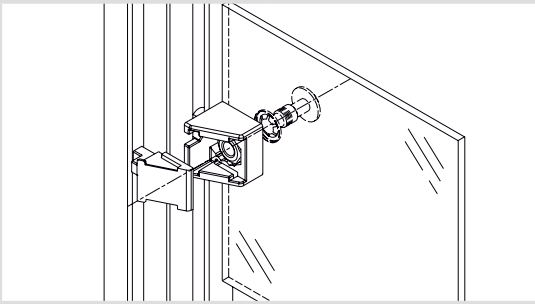

Captive fasteners

B34.01.003

The captive fasteners, together with a undercut flanged button-head screw and ribbed washer, are used to retrofit panelling into existing structures in accordance with the Machinery Directive. The panelling requires ø 9 mm bores at a distance of 10 to 15 mm from the profile frame.

Detail B ➔ Page 250

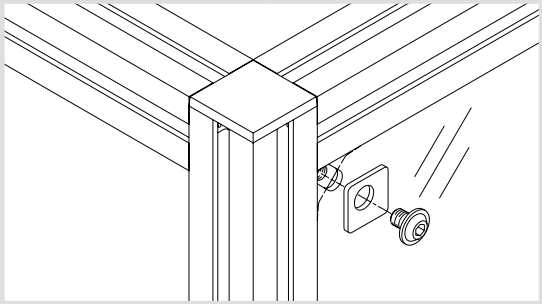

Fastening with angle and shim

This type of fastening is suitable for sheets 1.52 mm thick. The edge bending around the sheet provides the necessary stiffness up to side lengths of 1200 mm. For lengths greater than this, an additional mk 2578 holder is required. The angles must have an M8 thread on the side. A shim (07.01.0005) is used to cover the oblong hole, and the sheets are screwed on using flanged button-head screws.

Custom Supply Trolley

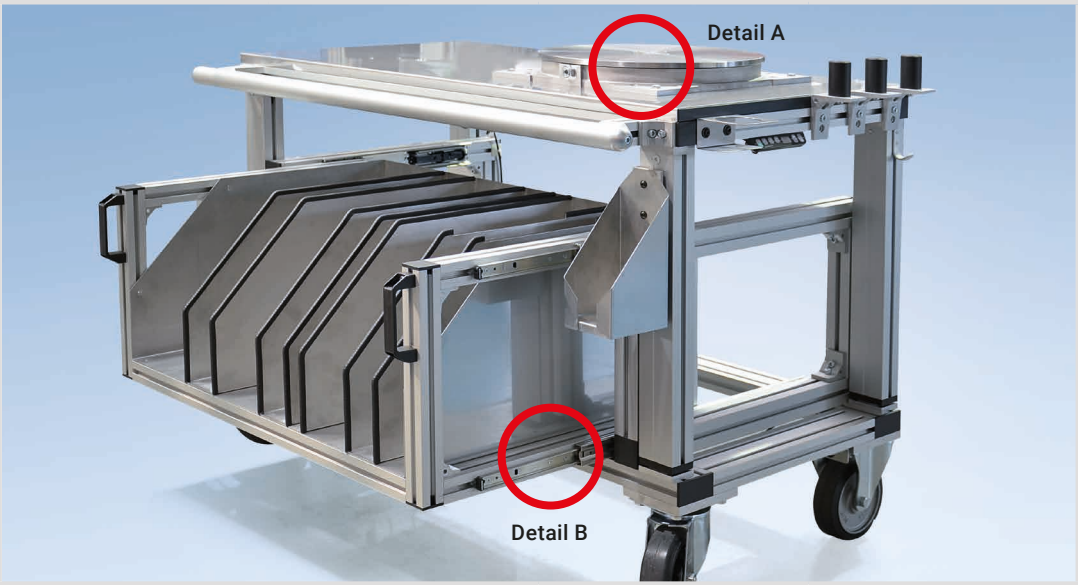

Assembly and supply trolley with electrical height adjustment for assembling a drive unit. To ensure continuous assembly flows in production, the trolley can be moved to various assembly stations and docked using magnets. The trolley's lower level contains customised storage compartments, which can be slid out to allow for easier removal of the components to be assembled.

Detail A

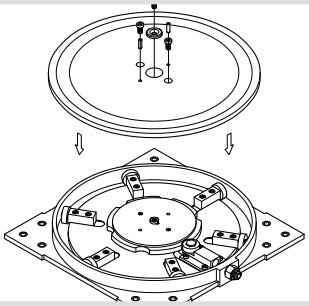

Rotary disk

B12.00.001

The rotary disk is ideally suited for the manual assembly process. Heavy loads can be quickly and easily positioned to facilitate assembly. The rotary disk has an incremental function, in this case 6 x 60°, which allows the disk to be fixed in predefined positions. It can support a maximum load of 100 kg.

Detail B

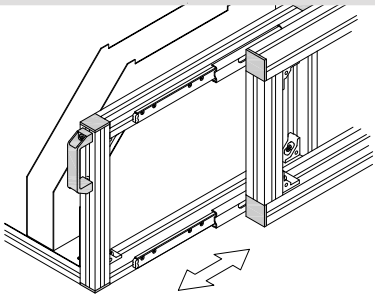

Sliding compartment

The sliding compartment runs on a ball guide, which is attached at the sides (top and bottom) and has a load capacity of 150 kg. The guide retracts automatically and locks in the closed position, and it features damping at the end positions.

Custom stair crossover

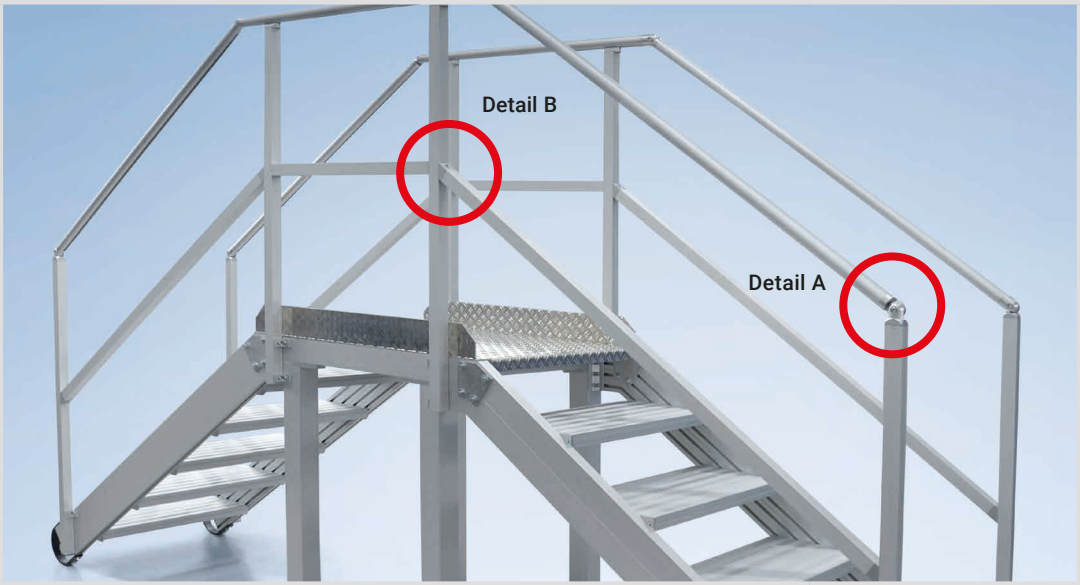

This stair crossover is a typical solution for creating crossings over transport routes, e.g. as a fire protection solution. The step plate on the platform is angled upwards so that dirt does drop down. In this application, the transition is used in a technically clean area. Therefore, the outer surfaces were designed with closed cleanroom profiles to avoid open gaps.

Detail A

➔ Page 332

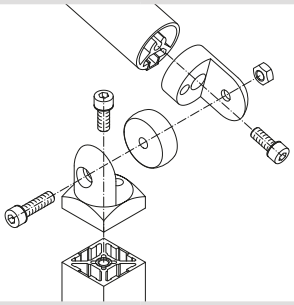

Hinge 40/H6

B46.01.027

The hinge connects the mk 2040.01 and mk 2040.16 profiles at any angle. First the two halves of the joint are screwed to the profiles using cylinder head screws, and then the entire assembly is assembled and locked using an additional cylinder head screw. The assembly contains all fastening accessories.

Detail B

➔ Page 127

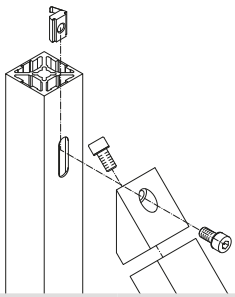

Truss block with cleanroom profiles

45° block 79.01.0066

The block is used to connect two profiles at an angle of 45°. The corner block is screwed to the face of a 40 x 40 profile and fastened to the other profile using a screw and nut connection. The truss block ensures that no mitre cuts need to be made in the profiles. The slot in the closed cleanroom profile is completely covered by the corner block.

Customer-Specific Applications – General Profile Technology

System frame built from Series 25 profiles

11

System frame built from mk 2025.02 profiles

Fire engine interior built from Series 25 profiles

Cleanroom warehouse with storage and retrieval device and transfer stations built from mk's Series 40 cleanroom profiles

Mobile support frame built from Series 40 cleanroom profiles

Frame built from Series 40 profiles for a system that monitors plant growth

Customer-Specific Applications – General Profile Technology

Flexible light-duty frame made from
Series 40 profiles for desalination plant

11

Frame and suspension for conveying path
at a height of 5 m below the hall ceiling

Overhead structure built from Series 40 profiles
to support supply lines for assembly workstations

Mobile frame with double swing door and
integrated belt conveyor made from Series 40 profiles

Base frame with levelling feet and holders for workpiece carriers

Customer-Specific Applications – General Profile Technology

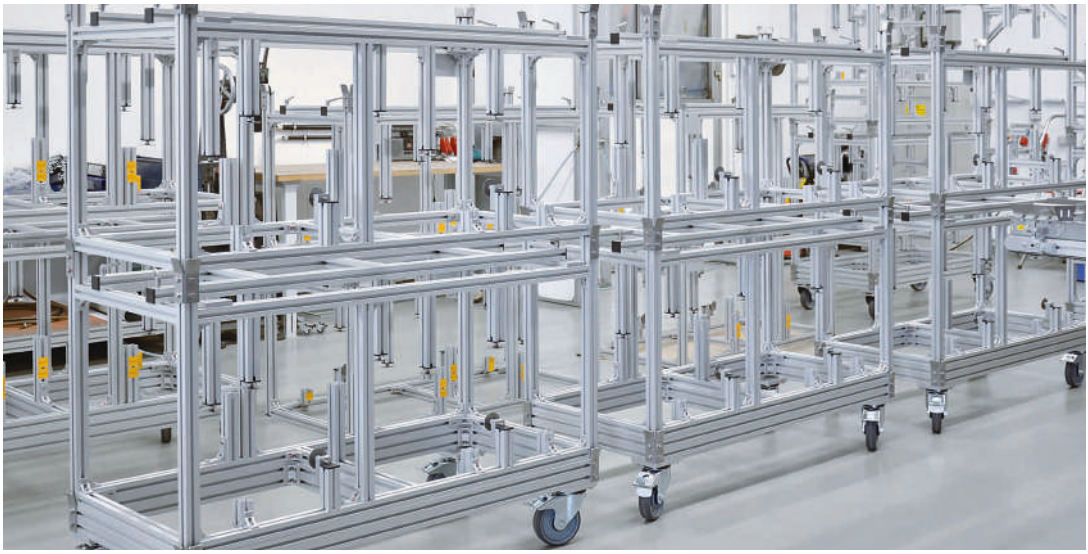

Testing and storage frame for fuel tanks
made from Series 40 profiles

11

Machine frame made from Series 50 profiles

Frame for hopper conveyor
made from Series 50 profiles

Base structure built from Series 40 and Series 60 profiles

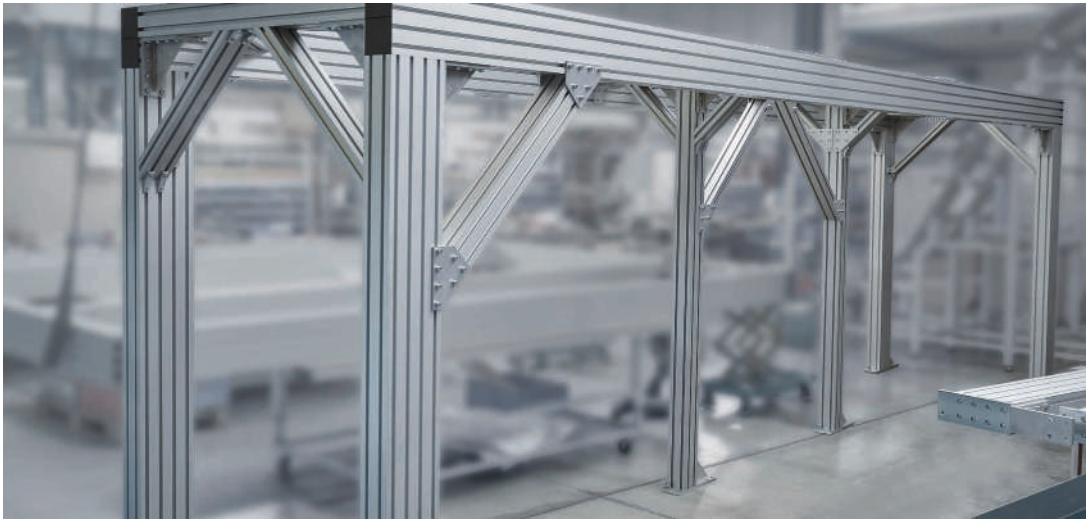

Solid gantry frame for beverage sorting system made from Series 60 profiles

Customer-Specific Applications – Guarding

Protective laser enclosure with labyrinth seals for automation line

11

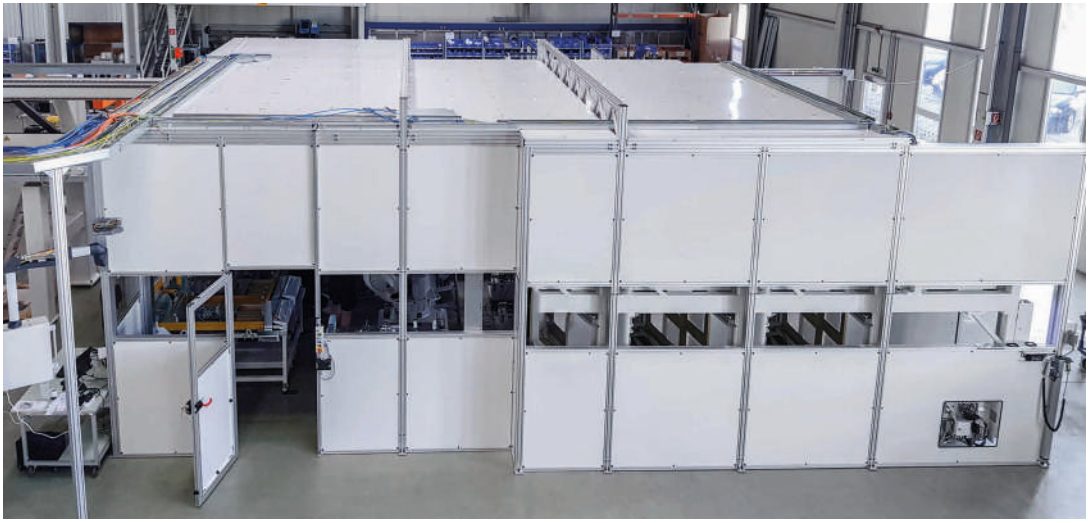

Cleanroom for a fully automated testing system with reinforcement by truss struts for ceiling and walls to support heavy interior components

Extendible guarding elements; sections mounted on rollers can be moved manually over the first section

Protective device guard with interlocked swing doors for removal and inspection of the component

Retrofitting of a production line with protective device guards

Customer-Specific Applications – Guarding

Custom guarding for production machine

11

Protective device guard with Alucobond® and polycarbonate panelling material

Scanning enclosure with double swing doors

Cabinet with swing doors and ball latches,
powder-coated cover panels, table top and removable shelves

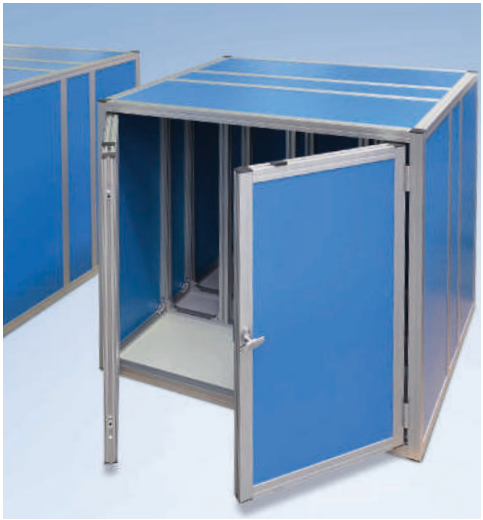

Container with double swing door,
rod-locking cabinet latch and tower bolt

Custom guarding with lifting swing door
operated by pneumatic springs

Customer-Specific Applications – Guarding

Protective laser enclosure with separate housing for operating elements and maintenance flap

11

Frame with housing for fully automatic ice machine; the dispensing tray is operated by a pneumatic spring

Measuring chamber made of black anodised profiles with automated feed and removal

Mobile machine housing using Series 50 profiles for strip rolling line

Charging unit for non-woven fabric production with maintenance door and extraction hood

Protective housing for balancing stand, access via swing door with safety interlock and safety controller for the balancing stand

Customer-Specific Applications – Guarding

Soundproof enclosure with double swing doors and with convoluted foam cover for coin transport system

11

Guarding with swing doors made from cleanroom profiles

Cabinet with swing doors and sliding shelves

Protective housing for 45 metre long assembly system with passages and bridges for maintenance

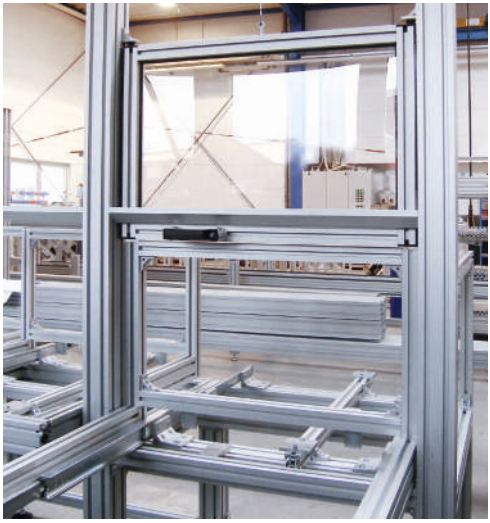

Manual lifting doors with counterweights in the profile, connected by cable and idler pulleys, capable of balancing

Custom protective device guard made from partitions with powder-coated perforated sheets and sliding doors with solenoid latches

Customer-Specific Applications – Guarding

Custom guarding for pram test bench

11

Guarding with welded grids (partition method)
for tray transport system

Swing door mounted in panel frame with black powder-coated welded grid

Guarding for transfer station with cantilevers for mounting an overhead conveyor

Telescopic guarding on casters

Customer-Specific Applications – Industrial Workstations

Workbench for manual inspection in the grading area for smartphones

11

Assembly workstation with crank-operated manual height adjustment, 600 kg load capacity

Assembly workstation with integrated press and document holder

ESD-compliant assembly and test line with integrated conveying path for analysis units

Test station made from Series 50 profiles, base cabinet with drawers and swing door, gantry with steel and perforated sheet panelling

Assembly workstation with lowering mechanism based on electrically driven hydraulic cylinders

Customer-Specific Applications – Industrial Workstations

Height-adjustable workstation with monitor, magnifying lamp and a separate supply trolley for providing materials

11

Workstation with tall gantry and separate steel container for cables

J1 workbench with integrated electrical supply, footrest and custom monitor holder

Ergonomic workbench with roller conveyors for material feed and removal, complete with hydraulic height adjustment and ESD protection

Workstation with electro-hydraulic height adjustment and base cabinet

Workstation with hydraulic height adjustment and swivelling steel shelves with adjustable depth

Customer-Specific Applications – Industrial Workstations

Stable assembly workstations with
profile racks and shelves

11

Workbench with swing doors and
swivelling device for work surface

Custom test station with
19 inch rack and monitor mount

Service and assembly units

Industrial workstation in DFT flow line for manufacturing vacuum pumps

Workstation with protective cover and manually adjustable sliding element

Test station for pumps with perforated sheet panelling, sliding door and keyboard shelves

Customer-Specific Applications – Industrial Workstations

Mobile base cabinet for medical laboratory with cabinet for internal computer and control equipment

11

Assembly line for pumps built from Series 50 profiles with profile slots closed using red closure strips

Rolling workbench made from Series 50 profiles with three drawers for storing tools

ESD-compliant loading and unloading station
for feeding of small load carriers

Material trolley for picking in narrow
aisles with carousel concept

Kanban shelf with mini roller conveyors for
material feed and empty crate return

Customer-Specific Applications – Industrial Workstations

Kanban workstation for increasing productivity
by decoupling assembly and supply logistics

11

Supply shelf with shelves made
of laminated plates

Customised supply
trolley for laboratory

Kanban system workstation for manual removal and picking of products

FiFo supply shelf (first in – first out) with roller strips

Customer-Specific Applications – Industrial Workstations

Custom material provision station for bar stock and individual parts

Kanban material provision station with rollers strips

11

Light duty supply trolley made of round tube profiles with smooth-running castors

Supply trolley made from Series 40 profiles painted red

Assembly trolley with hydraulic cylinder and central locking device

Transport trolley in which the spring-loaded floor lowers when weight is applied and rises again when the weight is removed

Sturdy supply trolley for heavy products

Material supply trolleys made from Series 40 cleanroom profiles with acrylic shelves

Customer-Specific Applications – Stairs and Platforms

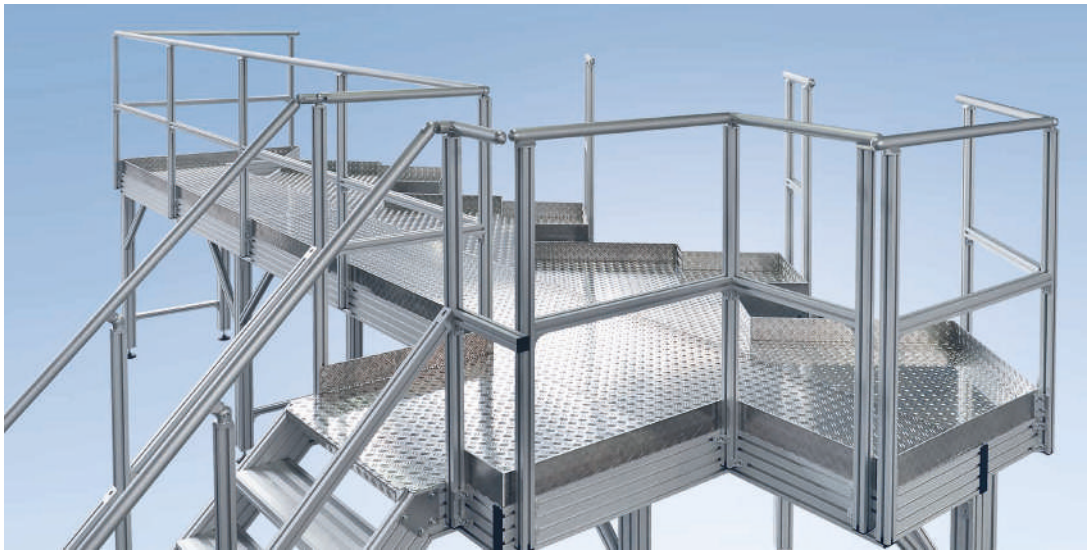

Assembly platform made from
Series 40 profiles with levelling feet

11

Mobile assembly platform for helicopters with
different levels and multiple access points

The T-slots are suitable for attaching components,
such as the electrical supply

Free-standing assembly platform, 15 metres long,
with high-load stairs for secure grip when carrying heavy loads

Free-standing bridge for bridging a conveying path in accordance with the
regulations of the occupational health and safety directive (traffic routes)

Customer-Specific Applications – Stairs and Platforms

Platform made of Series 40 profiles with welded grid panelling

11

Stair crossover for confined spaces

Mobile platform for inspecting stacked overseas containers

Bridge structure consisting of stair and guardrail elements with Series 40 closed cleanroom profiles

Platform with retractable welded grid frame

Posts connected to platform and toe kick using angles

Customer-Specific Applications – Stairs and Platforms

Free-standing assembly platform with 45° stairs

11

T-connector 40/H2 for hand rail

Hinge 40/H3 for the intersection between stairs and platform

Guardrail corner with hinge 40/H2

Assembly flap in platform floor with anti-slip covering

Extremely sturdy connections consisting of die-cast angle brackets, standard angle brackets and beam profiles are available for all profile series

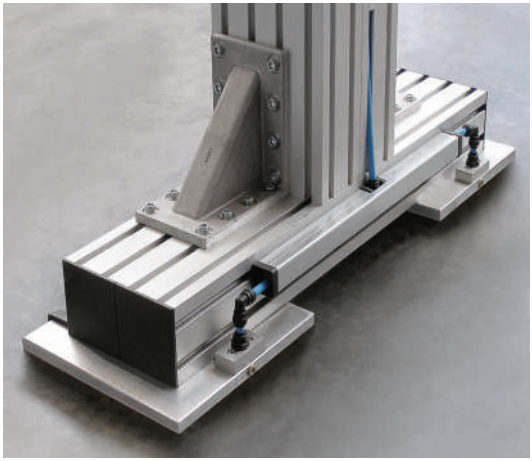

Platform support with air cushion transport system

Platform for performing maintenance and assembly work on helicopters safely and with ease

Index – by Search Terms

Accessories	320
Adapter profiles, series 25/40	46
Adjustable angle brackets	98
Allen wrench set	343
Anchor fasteners	116
Angle brackets, 90°	93
Angle fasteners	82
Angle for fastening panelling	256
Angles, 30/45/60°	97
Angles, 90°	82
Application Examples – Industrial Workstations	374
Application Examples – General Profile Technology	362
Application Examples – Guarding	366
Application Examples – Stairs and Platforms	386
Application Examples with Instructions for Mounting	348
Application profiles	34
Application profiles for workstations	322
Assembly details	335
Ball joint elements	206
Ball latches	267
Base plates	188
Base plates, heavy-duty	190
Basic profiles, series 25	42
Basic profiles, series 40	50
Basic profiles, series 50	62
Basic profiles, series 60	68
Basic profiles, series D28	40
Benefits of mk industrial workstations	286
Benefits of mk profile technology	6
Bin mounts	306
Bolt fasteners	118
Bottle holders	311
Bracket handles	280
Brush strips	166
Bumpers	220
Cable ducts	208
Cap	339
Captive fastening system	238
Choosing a connection	78
Choosing a profile	12
Clamping jaws	117
Clamping levers	215
Clamping profile	257
Cleanroom profiles, series 40	56
Cleanroom profiles, series 50	66
Closed panels	247
Closure strips	160
Construction profile dimensions	22
Construction profiles	24
Conveying elements	216
Corner block joints	124
Corner blocks	124
Countersunk head screws	149
Countersunk nuts	144
Cover profile	161
Cover profiles	200
Curved profiles	21
Cylinder head screws	149
D28 90° angle fastener	136
D28 adapter for Series 40 profiles	141
D28 angle fastener	138
D28 ball joint connector	139
D28 cross connector	137
D28 parallel connector	140
Deflection calculator	13
Document holders	310
Door and window components	262
Door stop	267
Drawer cabinets	298
Drawers, 1 drawer	298
Drawers, 2 drawers	299
Drawers, 4 drawers	299
Drilling jigs for cleanroom profiles	345
Drilling jigs for pneumatic components	346
Drilling jigs for tension plugs	344
Drills	342
Earth terminal	288
Edge profiles	252
Electrical height adjustment	293
Electrical height adjustment heavy-duty	294
Electrical supply	317
Electronic solenoid latch	277
End caps	154
End services	16
End services for angle braces	20
End stop 2065/2066	304
Explanation of symbols	8
External locks	268
Eye bolts	221
Fastening accessories for panelling	254
Features of mk aluminium profiles	12

Features of mk connection technology	78
Fence clips	258
Fixed and swivel casters, type A	196
Fixed and swivel casters, type B	197
Fixed working height	290
Flanged button-head screws	150
Floor mats	321
Floor plates	184
Foamed combined profiles	71
Folding windows	244
Foot plates	178
Footrests for workstations	320
Forming taps	342
Gantry	300
Grid panels	250
Guarding configurator	224
Guardrails	336
Guardrails, notes/technical data	336
Handles	280
Handwheels	214
HELICOIL	150
HELICOIL taps	342
Hexagon head screws	150
Hexagon nuts	151
Hinge tension plugs	119
Hinges	202
Hinges	262
Hinges for hand rails	337
Hinges for panelling	266
Holder for fastening panelling	254
Holder for roller strips	305
Holders for levelling feet	178
Information on panelling	246
Installation elements	208
Installation tool for HELICOIL	342
Installation tool for threaded insert	342
Internal fasteners	110
Internal locks	269
Kanban components	310
Kanban transport systems	304
LED illuminated magnifying glass	314
LED system lamps	312
Levelling feet	170
Levelling feet with mounting bores	174
Levelling feet, stainless steel	175
Lifting doors	234
Lighting	312
Load specifications	80
Magnetic holders for nuts	343
Manual height adjustment	291
Manual-hydraulic height adjustment	292
Mechanical solenoid latches	276
Mini-rollers	216
Monitor mount	308
Notes on guarding	224
Notes on industrial workstations	286
Notes on stairs and platforms	328
Nut fixtures	148
Nuts	142
Nuts for later mounting	146
Nuts/T-nuts	142
Operating elements	214
Other accessories	220
Overview of profiles	22
Panel clamps	255
Panelling	246
Panelling with fastening accessories	254
Parallel connectors	121
Parting tool for cleanroom profiles	343
Partitions	228
Perforated sheets	251
Plate fasteners	100
Plate fasteners, heavy-duty	104
Plates for levelling feet	181
Platforms	334
Platforms, notes/technical data	334
Pneumatic components	210
Pneumatic supply	316
Pneumatic unit	316
Posts	236
Profile clamps	134
Profile for footrests	325
Profile for strip handles	283
Profile services	16
Profiles for fastening panelling, series 25	48
Profiles for fastening panelling, series 40	59
Profiles for steps	333
Profiles for table/machine frames	324
Profiles for telescoping, series 40	322
Profiles for telescoping, series 50	67
Provision of material	302
Rack systems	302
RBS-P 2065/2066 roller conveyor	304
Retaining angles	194

Index – by Search Terms

Ribbed washers	151
Roller strips	305
Roller units	271
Safety accessories	272
Safety distances	225
Safety interlocks	272
Sanding sponge	343
Sealing Strip for fastening panelling	259
Selection matrix for connecting elements	81
Sensor holders	209
Series 25 profiles	42
Series 40 profiles	50
Series 50 profiles	62
Series 60 profiles	68
Series D28 connector	136
Series D28 profiles	40
Shelves	307
Shop and CAD data	9
Side lights	315
Side walls	332
Slam latches	278
Sliding doors	232
Sliding windows	243
Stairs	330
Stairs, notes/technical data	330
Standard parts	149
Standards and basic information	14
Standards and ESD protection	288
Steps	332
Support brackets	192
Swing doors	230
Swivel arms	303
System selection	227
Table frames	290
Table top fasteners	297
Table top materials	296
Table tops	296
Taps	342
T-connection	339
Tension plug, front side	120
Tension plugs and screw connections	110
Tension washers	151
Threaded Insert	150
Threaded pins	151
Tool hangers	309
Tower bolts	270
Track rollers	217
Truss blocks	131
T-slot nuts	145
Twist drills	342
Wall joint	339
Wear strips	162
Wear strips for door stops	164
Wear strips for sliding elements	165
Window, double-leaf	242
Window, single-leaf	240
Windows	240
Workstation ergonomics	287

Index – Profiles by ID Number

25.01.	mk 2025.01 (25x25)	42
25.02.	mk 2025.02 (25x50)	43
25.03.	mk 2025.03 (25x100)	43
25.04.	mk 2025.04 (25x150)	43
25.05.	mk 2025.05 (50x50)	43
25.18.	mk 2025.18	49
25.20.	mk 2025.20	45
25.21.	mk 2025.21	45
25.22.	mk 2025.22	44
25.31.	mk 2025.31 (25x25)	48
25.32.	mk 2025.32 (25x50)	49
25.35.	mk 2025.35 (25x25)	48
25.36.	mk 2025.36 (25x50)	49
25.37.	mk 2025.37	49
25.38.	mk 2025.38	49
25.39.	mk 2025.39	49
25.41.	mk 2025.41 (20x40)	46
25.42.	mk 2025.42 (20x80)	46
25.43.	mk 2025.43 (20x120)	47
25.44.	mk 2025.44 (20x160)	47
45.41.	mk 2045.41	CT*
45.42.	mk 2045.42	CT*
51.00.	mk 2000 (50x50)	63
51.01.	mk 2001	63
51.02.	mk 2002 (50x50)	63
51.03.	mk 2003	63
51.04.	mk 2004 (50x100)	64
51.05.	mk 2005 (100x100)	64
51.06.	mk 2006 (50x150)	65
51.07.	mk 2007	CT*
51.08.	mk 2008 (50x200)	65
51.09.	mk 2009	64
51.10.	mk 2010	CT*
51.11.	mk 2011 (100x100)	65
51.12.	mk 2012	CT*
51.14.	mk 2014 (50x50)	63
51.17.	mk 2017 (50x50)	66
51.18.	mk 2018 (50x50)	66
51.19.	mk 2019 (50x50)	66
51.23.	mk 2023 (50x75)	64
51.24.	mk 2024	CT*
51.26.	mk 2026	CT*
51.27.	mk 2027	CT*
51.28.	mk 2028	CT*
51.30.	mk 2030	63
51.31.	mk 2031	67
51.33.	mk 2033	67
51.50.	mk 2050	202
51.51.	mk 2051	202
51.60.	mk 2060	CT*
51.61.	mk 2061	CT*
51.65.	mk 2065	CT*
51.66.	mk 2066	CT*
51.72.	mk 2072	65
51.75.	mk 2075	CT*
51.76.	mk 2100	CT*
51.77.	mk 2150	CT*
51.86.	mk 2086	CT*
52.03.	mk 2203	246
52.06.	mk 2206	246
52.07.	mk 2207	246
52.10.	mk 2210	246
52.11.	mk 2211	246
52.14.	mk 2214	246
52.15.	mk 2215	246
52.20.	mk 2220	253
52.38.	mk 2238	CT*
52.39.	mk 2239	CT*
52.40.	mk 2240	237
52.41.	mk 2241	237
52.44.	mk 2244	277
52.45.	mk 2245	CT*
52.51.	mk 2251	CT*
52.54.	mk 2254	226/303
52.55.	mk 2255	CT*
52.60.	mk 2260	CT*
52.79.	mk 2279	40
52.80.	mk 2280	40
54.01.	mk 2040.01 (40x40)	51
54.02.	mk 2040.02 (40x80)	53
54.03.	mk 2040.03 (80x80)	53
54.04.	mk 2040.04	61
54.05.	mk 2040.05 (40x120)	54
54.06.	mk 2040.06 (40x160)	54
54.07.	mk 2040.07 (80x120)	54
54.08.	mk 2040.08 (80x160)	55
54.09.	mk 2040.09 (160x160)	55
54.10.	mk 2040.10 (120x120)	55
54.100.	mk 2040.100 (40x80)	57
54.101.	mk 2040.101 (40x80)	57
54.104.	mk 2040.104 (40x80)	57
54.109.	mk 2040.109 (80x80)	57
54.11.	mk 2040.11 (40x40)	59
54.12.	mk 2040.12 (40x80)	60

* See conveyor technology catalogue (CT)

54.13.	mk 2040.13 (80x80)	61
54.14.	mk 2040.14	60
54.15.	mk 2040.15	60
54.16.	mk 2040.16	57
54.19.	mk 2040.19	61
54.21.	mk 2040.21 (40x40)	59
54.22.	mk 2040.22 (40x80)	60
54.23.	mk 2040.23	318
54.30.	mk 2040.30	318
54.31.	mk 2040.31 (40x40)	50
54.33.	mk 2040.33	318
54.34.	mk 2040.34	318
54.35.	mk 2040.35	318
54.36.	mk 2040.36	316
54.37.	mk 2040.37	317
54.38.	mk 2040.38	317
54.39.	mk 2040.39	317
54.40.	mk 2040.40 (40x40)	51
54.41.	mk 2040.41 (40x80)	52
54.42.	mk 2040.42	196
54.43.	mk 2040.43	196
54.44.	mk 2040.44	196
54.45.	mk 2040.45 (80x80)	53
54.46.	mk 2040.46 (80x80)	61
54.50.	mk 2040.50	202
54.51.	mk 2040.51	202
54.52.	mk 2040.52 (40x80)	52
54.60.	mk 2040.60	251
54.68.	mk 2040.68	327
54.69.	mk 2040.69	327
54.70.	mk 2040.70	319
54.73.	mk 2040.73 (80x80)	54
54.74.	mk 2040.74	317
54.75.	mk 2040.75	317
54.80.	mk 2040.80	CT*
54.85.	mk 2040.85	197
54.86.	mk 2040.86	CT*
54.92.	mk 2040.92 (40x40)	56
54.93.	mk 2040.93 (40x40)	56
54.94.	mk 2040.94 (40x40)	57
54.95.	mk 2040.95 (40x40)	57
54.96.	mk 2040.96 (40x40)	57
60.01.	mk 2060.01 (60x60)	69
60.02.	mk 2060.02 (60x120)	69
60.03.	mk 2060.03 (60x180)	69
60.04.	mk 2060.04 (60x240)	69
60.05.	mk 2060.05 (120x120)	70
60.07.	mk 2060.07 (120x240)	70
60.30.	mk 2060.30	156

* See conveyor technology catalogue (CT)

Index – Items by Item Number

05.06.0015	Bolt		232
07.01.0005	Shim		250
07.13.0003	Spring clip for M5/M6 nut		144
14.00.0004	Spacer part		251
16.00.0000	Sensor holder A		204
16.00.0001	Sensor holder A		204
16.00.0006	Sensor holder B		204
16.00.0007	Sensor holder B		204
16.00.0016	Sensor holder D		204
16.00.0017	Sensor holder D		204
16.00.0018	Sensor holder D		204
16.00.0026	Sensor holder E		204
16.00.0027	Sensor holder E		204
16.00.0028	Sensor holder E		204
16.01.0038	Spacer ring		313
16.05.0011	Sensor holder A		204
16.05.0030	Angle for strain relief		313
19.00.0005	Guide piece		226/265
19.02.0022	Inner guide		316
21.01.2000	Wear strip mk 1040.01		158
21.02.2000	Wear strip mk 1040.02		159
21.03.2000	Wear strip mk 1040.03		159
21.04.2000	Wear strip mk 1040.04		159
21.05.2000	Wear strip mk 1040.05		159
21.62.2000	Wear strip mk 1060.62		159
21.64.2000	Wear strip mk 1060.64		159
22.00.2000	Wear strip mk 1000		158
22.01.2000	Wear strip mk 1001		159
22.08.2000	Wear strip mk 1008		159
22.09.2000	Wear strip mk 1009		161
22.17.2000	Wear strip mk 1017		159
22.21.2000	Wear strip mk 1021		161
22.26.2000	Wear strip mk 1026		161
22.27.2000	Wear strip mk 1027		161
22.70.2000	Wear strip mk 1070		159
22.71.2000	Wear strip mk 1071		159
22.72.2000	Wear strip mk 1072		159
22.90.0035	Stop for swing doors		160/261
22.90.2000	Wear strip mk 1090		160
22.91.0035	Stop for sheet metal doors		160
22.91.2000	Wear strip mk 1091		160
22.92.0035	Stop for swing doors		160/261
22.92.2000	Wear strip mk 1092		160
24.05.	Welded grid panel		252
24.06.	Welded grid panel		252
25.50.0500	Nut 1	M5	138
25.50.0501	Swivel-in nut 1	M5	142
25.50.0504	Nut 2/25	M5	138
25.50.0505	Nut 2/25 ESD	M5	138
25.50.0508	Nut 1 ESD	M5	138
25.50.0512	Nut 1	M6	138
25.50.0513	Nut 2/25		138
25.50.0518	Nut 1 ESD	M6	138
25.50.0540	Nut 1	M4	138
25.50.0541	Swivel-in nut 1	M4	142
25.50.1000	Angle 15		78
25.50.1001	Angle 40		78
25.50.1010	Angle S15		79
25.50.1012	Angle S40		79
25.50.1020	Angle A25/15/2		78
25.50.1021	Angle A25/40/2		78
25.50.3000	Straight plate 01		96
25.50.3001	Straight plate 02		96
25.50.3002	Angle plate 01		96
25.50.3006	T-plate 01		96
25.50.3300	Corner block 25		120
25.50.3301	Corner block 26		120
25.50.7000	Clamp 25/0		130
25.50.7002	Clamp 25/2		130
25.50.8000	End cap mk 2025.01		150
25.50.8001	End cap mk 2025.02		151
25.50.8002	End cap mk 2025.20		151
25.50.8003	End cap mk 2025.21		151
25.50.8004	End cap mk 2025.37		151
25.50.8005	End cap mk 2025.38		150
25.71.2000	Wear strip mk 1025.71		158
25.72.2000	Wear strip mk 1025.72		158
25.73.2000	Wear strip mk 1025.73		158
26.00.0006	Retaining angle 1		190
26.00.0012	Retaining angle 2		190
26.00.0052	Holder for table top		291
26.00.0054	Floor fastening		168
26.00.0060	Retaining angle 60/1		190
30.00.0027	Clamp 1/40		131
30.00.0029	Clamp 2/40		131
30.00.0033	Clamp 5/30		131
30.00.0034	Clamp 5/40		131
30.00.0036	Clamp 6/40		131
30.00.0048	Clamp 40/25		130
31.00.0001	Angle bracket 1		90
31.00.0002	Angle bracket 2		90
31.00.0004	Angle bracket 4		90
31.00.0005	Angle bracket 5		90
31.00.0007	Angle bracket 7		90

31.00.0014	Angle bracket 14		91
31.00.0015	Angle bracket 15		91
31.00.0016	Angle bracket 16		91
31.40.0016	Angle bracket 16/40		89
31.60.0009	Angle bracket 60/1		92
31.60.0010	Angle bracket 60/7		92
34.01.0001	Nut 1	M8	138
34.01.0002	Nut 2/25	M8	139
34.01.0003	Nut 2/50	M8	139
34.01.0004	Nut 3/25	M8	139
34.01.0005	Nut 2/75	M8	139
34.01.0006	Nut 3/50	M8	139
34.01.0007	Nut 4/50	M8	139
34.01.0011	Nut 2/35	M8	139
34.01.0018	Nut 1 ESD	M8	138
34.01.0019	Nut 2/40	M8	139
34.01.0022	Nut 3/40	M8	139
34.01.0024	Nut 1 VA	M8	138
34.01.0050	Nut 1 ESD	M8	139
34.01.0051	Nut 1	M8	139
34.02.0008	Nut 1	M6	138
34.02.0010	Nut 2/25	M6	139
34.02.0012	Nut 1 VA	M6	138
34.02.0018	Nut 1 ESD	M6	138
34.02.0050	Nut 1 ESD	M6	139
34.02.0051	Nut 1	M6	139
34.03.0001	Slot nut 1	M8	142
34.03.0002	Slot nut 1 VA	M8	142
34.04.0001	Slot nut 1	M6	142
34.04.0002	Slot nut 1	M5	142
34.04.0003	Slot nut 1 VA	M6	142
34.06.0002	T-nut 1	M8	142
34.07.0002	T-nut 1	M6	142
34.07.0003	T-nut 1	M5	142
34.07.0004	T-nut 1	M4	142
34.08.0001	Nut 1	M4	138
34.08.0004	Nut 1 VA	M4	138
34.08.0018	Nut 1 ESD	M4	138
34.09.0001	Countersunk nut S1		140
34.09.0002	Countersunk nut S2/50		140
34.09.0006	Countersunk nut S2/100		140
34.09.0007	Countersunk nut S2/40		140
34.12.0001	Nut 1	M5	138
34.12.0004	Nut 1 VA	M5	138
34.12.0018	Nut 1 ESD	M5	138
34.14.0006	Clip (series 50)	M4	142
34.14.0007	Clip (series 50)	M5	142
34.14.0008	Clip (series 50)	M6	142
34.16.0431	Swivel-in nut 1	M4	143
34.16.0531	Swivel-in nut 1	M5	143
34.16.0537	Swivel-in nut 1	M5	143
34.16.0631	Swivel-in nut 1	M6	143
34.16.0637	Swivel-in nut 1	M6	143
34.16.0831	Swivel-in nut 1	M8	143
34.16.0834	Swivel-in nut 2/40 M8		143
34.16.0835	Swivel-in nut 3/25 M8		143
34.16.0837	Swivel-in nut 1	M8	143
34.60.0101	Nut 1	M8	140
34.60.0201	Nut 1	M10	140
34.60.0203	Nut 2/60	M10	140
34.60.0205	Nut 3/60	M10	140
34.60.0301	Nut 1	M12	140
34.60.0303	Nut 2/60	M12	140
34.60.0305	Nut 3/60	M12	140
34.60.0321	Nut 1 VA	M12	140
34.60.1101	Slot nut 1	M8	142
34.60.1201	Slot nut 1	M10	142
34.60.1301	Slot nut 1	M12	142
34.60.2001	T-slot nut 1		141
34.60.2101	T-slot nut 1		141
3855BF0200	Profile 3855		101
3856BD0200	Profile 3856		101
3860BD0200	Profile 3860		104
3861BD0200	Profile 3861		104
50.02.0001	Foot plate C	M16	179
50.02.0002	Foot plate C	M20	179
50.02.0003	Foot plate B	M16	179
50.02.0004	Foot plate B	M20	179
50.02.0007	Foot plate G	M16	176
50.02.0008	Foot plate G	M20	176
50.02.0010	Foot plate D	M12	176
50.02.0011	Foot plate D	M16	176
50.02.0018	Foot plate F	M16	176
50.02.0023	Base plate 1		187
50.02.0026	Base plate 2		187
50.02.0028	Base plate 4		187
50.02.0029	Base plate 5		187
50.02.0030	Foot plate I	M16	177
50.02.0032	Foot plate J	M16	177
50.02.0035	Foot plate I	M12	177
50.02.0040	Foot plate K	M16	177
50.02.0041	Foot plate I	M10	177
50.02.0042	Foot plate J	M10	177
50.02.0043	Foot plate K	M10	177

Index – Items by Item Number

50.02.0050	Foot plate J	M20	177
50.02.0067	Foot plate J	M12	177
50.02.0068	Foot plate	M10	177
50.02.0088	Base plate 6		185
50.02.0089	Base plate 7		185
50.02.0091	Foot plate R1		193
50.02.0093	Foot plate R3		192
50.02.0094	Foot plate R4		193
50.02.6004	Foot plate 60/4	M16	179
50.02.6005	Foot plate 60/5	M20	179
50.02.6008	Foot plate 60/8	M16	179
50.02.6009	Foot plate 60/9	M20	179
50.03.0001	Base plate 1		182
50.03.0002	Base plate 2		182
50.03.0003	Base plate 4		182
50.03.0004	Base plate 4a		182
50.03.0005	Base plate 5		183
50.03.0006	Base plate 6		183
50.03.0007	Base plate 7		183
50.03.0008	Base plate 8		183
50.03.0009	Base plate 40/1		181
50.03.0010	Base plate 40/2		181
50.03.0011	Base plate 40/3		181
50.03.0012	Base plate 40/4		181
50.03.0025	Plate 40/17		180
50.03.0026	Plate 40/18		180
50.03.0028	Plate 40/20		180
50.03.0034	Wall joint		333
50.03.6002	Base plate 60/2		183
50.03.6008	Base plate 60/8		183
50.05.0010	Connection plate 10		103
50.05.0011	Connection plate 11		103
50.05.0012	Connection plate 12		103
50.05.0013	Connection plate 13		103
50.05.0016	Connection plate 16		102
50.05.0017	Connection plate 17		102
50.05.0018	Connection plate 18		103
50.05.0045	Angle plate 03		99
50.05.0046	T-plate 03		99
50.05.0047	Straight plate 07		98
50.05.0051	Angle plate 13		99
50.05.0052	Straight plate 03		98
50.05.0053	Straight plate 05		97
50.05.0060	Connection plate 40/2		100
50.05.0061	Connection plate 40/3		100
50.05.0062	Connection plate 40/4		100
50.05.0064	Connection plate 40/6		101
50.05.0065	Connection plate 40/7		101
50.05.0066	Connection plate 40/8		101
50.05.0070	Straight plate 09		98
50.05.0077	Straight plate 04		98
50.05.6010	Connection plate 60/10		105
50.05.6012	Connection plate 60/12		105
50.05.6026	Connection plate 60/26		105
50.09.0013	Foot plate A	M10	178
50.09.0037	Foot plate 1	M20	178
50.09.0038	Foot plate 3	M20	179
50.09.0039	Foot plate I	M20	179
50.09.0040	Plate 4	M20	215
50.09.0041	Plate 5	M20	215
50.09.0044	Foot plate A	M12	178
50.09.0045	Foot plate A	M16	178
50.12.0005	Electrical supply head plate		313
50.13.5005	Beechwood multiplex top		290
50.13.5008	Beechwood multiplex top		290
50.13.6006	Laminated particleboard		290
50.13.6007	Laminated particleboard		290
50.13.6008	Laminated particleboard		290
5169BA	Cover module profile mk 2069		313
5169BB0200	Single module profile mk 2069		313
5169BC0200	Double module profile mk 2069		313
5169BD0300	Triple module profile mk 2069		313
53.00.0100	Closure plate A		207
53.00.0101	Closure plate B		207
53.00.0200	Connection plate A	G1/2"	207
53.00.0201	Connection plate B	G1/2"	207
53.00.0202	Connection plate C	G3/4"	207
53.00.0300	Distributor plate A18	G1/8"	207
53.00.0301	Distributor plate A28	G1/8"	207
53.00.0303	Distributor plate A14	G1/4"	207
53.00.0304	Distributor plate A24	G1/4"	207
53.00.0352	Connection plate A	G1/4"	207
53.01.0005	Flat seal A		206
53.01.0006	Flat seal B		206
5401BC	Profile service		263
5401CC0200	Angle brace 01		89
5401CC0300	Angle brace 01		89
5401CC0400	Angle brace 01		89
5401CC0500	Angle brace 01		89
5402CA200	Angle brace 02		89
5402CA300	Angle brace 02		89
5402CA400	Angle brace 02		89
5402CA500	Angle brace 02		89
5431BI	Profile service		263

5440BC	Profile service	263
63.00.0011	Step washer	210
65.00.0001	Base 1	189
65.00.0005	Base 5	189
67.00.0002	Holder for levelling foot M10	174
67.00.0003	Holder for levelling foot M10	174
67.00.0010	Holder for levelling foot M10	174
67.02.0004	Support bracket 40/1	189
67.02.0009	Support bracket 40/2	189
71.01.0019	Flanged button-head screws	146
71.01.0019A2	Flanged button-head screws A2	146
76.01.0002	End cap mk 2040.16	333
76.03.0018	Plate for tower bolt	264
76.03.0020	Angle guide	264
79.00.0001	Holder 5	126
79.00.0004	Holder 7	166
79.00.0011	T-connector 40/H2	333
79.01.0001	Corner block 1	125
79.01.0002	Corner block 2	125
79.01.0003	Corner block 3	126
79.01.0004	Corner block 4	126
79.01.0005	Corner block 5	122
79.01.0006	Corner block 6	122
79.01.0052	Truss block 2	129
79.01.0054	Truss block 4	129
79.01.0055	Truss block 5	129
79.01.0062	Block 30°	127
79.01.0066	Block 45°	127
79.01.0068	Block 60°	127
82.00.0023	Angle P1	80
82.00.0024	Angle P3	80
82.01.0007	Angle for junction box	313
82.02.0001	Angle A1	83
82.03.0001	Angle A3	83
82.05.0003	Angle B25	83
82.05.0004	Angle B50	84
82.05.0006	Angle B100	84
82.05.0012	Angle B150	84
82.05.0013	Angle B40	83
82.05.0022	Angle B90	84
82.05.0026	Angle B20/40	84
82.05.0051	Angle B50s1	84
82.05.0052	Angle B50s2	84
82.05.0053	Angle B50s3	84
82.05.0055	Angle B40s2	84
82.06.0001	Angle C25	85
82.06.0003	Angle C90	85
82.06.0009	Angle C90/2	85
82.06.0010	Angle C140/2	85
82.06.0014	Angle C40/3	85
82.06.0040	Angle C25s	85
82.06.0041	Angle C40s	85
82.06.0042	Angle C90s	85
82.07.0001	Angle D25	86
82.07.0003	Angle D90	86
82.07.0009	Angle D90/2	86
82.07.0010	Angle D140/2	86
82.07.0013	Angle D40/3	86
82.07.0040	Angle D25s	86
82.07.0041	Angle D40s	86
82.07.0042	Angle D90s	86
82.07.0043	Angle D140s	86
82.10.4001	Angle L25	93
82.10.4041	Angle L25s	93
82.11.4001	Angle M25	93
82.11.4041	Angle M25	93
82.12.4001	Angle N25	93
82.12.4041	Angle N25s	93
82.40.0701	Angle E25	80
82.40.0702	Angle E40	80
82.40.0703	Angle E80	80
82.40.0704	Angle E65	80
82.40.0705	Angle E120	81
82.40.0721	Angle E25 M8	250
82.40.0741	Angle E25s	81
82.40.0742	Angle E40s	81
82.40.0744	Angle E65s	81
82.40.0747	Angle E40s3	81
82.40.0761	Angle E25s M8	250
82.40.0801	Angle F25	81
82.40.0802	Angle F40	81
82.40.0803	Angle F80	81
82.40.0804	Angle F65	81
82.40.0805	Angle F40/R	81
82.40.0841	Angle F25s	82
82.40.0844	Angle F65s	82
82.40.0901	Angle G25	82
82.40.0902	Angle G40	82
82.40.0903	Angle G80	82
82.40.0904	Angle G65	82
82.40.0941	Angle G25s	82
82.40.0942	Angle G65s	82
82.60.0701	Angle H40	87
82.60.0702	Angle H100	87

Index – Items by Item Number

82.60.0741	Angle H40s	87
82.60.0742	Angle H100s	87
82.60.0801	Angle J40	88
82.60.0802	Angle J100	88
82.60.0901	Angle K40	88
82.60.0902	Angle K100	88
82.60.0941	Angle K40s	88
82.60.0942	Angle K100s	88
98.00.0006-G9005	End cap for mk 2040.19	153
98.00.0011-G9005	End cap for mk 2245	153
98.00.0012-G9005	End cap for mk 2040.16	152
98.00.0015-G9005	End cap for mk 2025.39	151
98.01.1411-G9005	Clip A1 10.3, ø 11	203
98.01.1511-G9005	Clip A1 10.4, ø 11	203
98.01.5420-G9005	Clip C1 10.3, 20x20	203
98.01.5520-G9005	Clip C1 10.4, 20x20	203
98.01.6411-G9005	Clip D1 10.3, ø 11	203
98.03.0010-G9005	Guide mk 2040.74	317
B02.13.030	Table frame C1	284
B02.13.040	Table frame D1	285
B02.13.043	Table frame D4	286
B02.13.090	Table frame J1	287
B02.13.100	Table frame K1	288
B02.21.020	Free-standing footrest	314
B02.21.030	Height-adjustable footrest	314
B02.22.001	Gantry	294
B02.22.002	Gantry, heavy-duty	295
B02.22.090	Gantry for table frame J1/K1	295
B02.22.100	Gantry for table frame J1/K1	295
B02.22.255	Shelf	296
B02.22.260	Shelf	296
B02.22.265	Mount for bins	300
B02.23.179	Pneumatic unit	310
B02.23.580	Electrical supply	312
B02.23.581	Power strip, 3 outlets	311
B02.23.582	Power strip, 6 outlets	311
B02.23.807	LED illuminated magnifying glass	308
B02.23.808	LED system lamp	306
B02.23.809	LED system lamp	306
B02.23.810	LED system lamp	306
B02.23.811	LED system lamp	306
B02.23.812	LED system lamp	306
B02.23.813	LED system lamp	306
B02.23.901	Drawer cabinet, 4 drawers	293
B02.23.902	Drawer cabinet, 2 drawers	293
B02.23.903	Drawer	292
B02.24.356	Rack without connection	300
B02.24.360	Swivel arm, double	297
B02.24.361	Swivel arm, double	297
B02.24.362	Swivel arm, single	297
B02.24.363	Swivel arm, single	297
B02.24.364	Angled shelf	301
B02.24.365	Straight shelf	301
B02.24.366	Bin holder	300
B02.24.367	Rack with connection	300
B02.31.005	Stairs 30°	325
B02.31.006	Stairs 35°	325
B02.31.007	Stairs 45°	325
B02.31.008	Stepladder 55°	325
B02.31.009	Stepladder 60°	325
B02.33.002	Step 40/150	326
B02.33.003	Step 40/250	326
B02.33.004	Step 40/300	326
B02.33.005	Step 40/200	326
B02.34.006	Side wall 40/30°	326
B02.34.007	Side wall 40/35°	326
B02.34.008	Side wall 40/45°	326
B02.34.009	Side wall 40/55°	326
B02.34.010	Side wall 40/60°	326
B02.99.001	Fastener set	293
B02.99.002	Fastener set	293
B02.99.003	Retainer for sliding piece	303
B02.99.004	Fastener set	292
B02.99.041	Document holder, 10 compartments	304
B02.99.050	Fastener set	291
B02.99.151	Earth terminal	282
B16.03.001	Fastener set	269
B16.03.002	Fastener set	269
B16.03.003	Fastener set	270
B16.03.008	Fastener set	271
B34.01.001	Panel clamp 40	249
B34.01.002	Panel clamp 50	249
B34.01.003	Holder with cover	248
B34.01.004	Holder with cover	248
B34.01.004A2	Holder with cover	248
B34.01.005	Holder with cover	248
B34.01.005A2	Holder with cover	248
B38.00.045	Sliding door roller carriage	226
B46.00.020	Adjustable angle bracket D25	95
B46.00.021	Adjustable angle bracket B25	95
B46.00.024	Adjustable angle bracket A25/3	94
B46.00.025	Adjustable angle bracket A25/1	94
B46.00.026	Adjustable angle bracket A25/2	94
B46.00.027	Adjustable angle bracket C25	95

B46.00.032	Adjustable angle bracket D25	95
B46.00.033	Adjustable angle bracket B25	95
B46.00.034	Adjustable angle bracket A25/3	94
B46.00.035	Adjustable angle bracket A25/1	94
B46.00.036	Adjustable angle bracket A25/2	94
B46.00.037	Adjustable angle bracket C25	95
B46.00.243	Holder, captive	232
B46.00.245	Holder, open	232
B46.01.001	Hinge 50-1/50-1	257
B46.01.002	Hinge 50-2/50-2	257
B46.01.010	Hinge 40-1/40-1	257
B46.01.011	Hinge 40-1/50-1	257
B46.01.012	Hinge 25-1/25-1	256
B46.01.013	Hinge 25-1/40-1	256
B46.01.014	Hinge 25-1/50-1	258
B46.01.022	Hinge 40/H1	331
B46.01.023	Hinge 40/H2	331
B46.01.024	Hinge 40/H3	332
B46.01.025	Hinge 40/H4	331
B46.01.026	Hinge 40/H5	332
B46.01.027	Hinge 40/H6	332
B46.01.030	Hinge 40-1/40-7/40-1	257
B46.01.033	Hinge series 25	259
B46.01.050	Hinge 40-1/40-3	260
B46.01.055	Hinge 50-1/40-3	260
B46.01.058	Hinge 60-1/60-1	258
B46.01.059	Hinge 60-1/60-2/60-1	258
B46.01.063	Hinge 40-1/60-1	258
B46.01.064	Hinge 50-1/60-1	257
B46.01.201	Hinge B01	199
B46.01.202	Hinge B02	199
B46.01.203	Hinge B03	199
B46.01.204	Hinge B04	199
B46.01.205	Hinge B05	199
B46.01.221	Hinge B21	198
B46.01.222	Hinge B22	198
B46.01.223	Hinge B23	198
B46.01.224	Hinge B24	198
B46.01.225	Hinge B25	198
B46.01.250	Hinge B50	200
B46.01.251	Hinge B51	200
B46.01.252	Hinge B52	200
B46.01.253	Hinge B53	201
B46.01.254	Hinge B54	201
B46.01.255	Hinge B55	201
B46.03.003	Drilling jig ø 6 mm	338
B46.03.007	Drilling jig	340
B46.03.102	Parting tool	337
B46.05.001	Corner block 30	120
B46.05.002	Corner block 31	121
B46.05.003	Corner block 32	121
B46.05.004	Corner block 33	121
B46.05.005	Corner block 34	121
B46.05.006	Corner block 35	121
B46.05.007	Corner block 36	121
B46.05.008	Corner block 37	121
B46.05.009	Corner block 38	121
B46.05.039	Corner block 46	123
B46.05.040	Corner block 39	123
B46.05.041	Corner block 40	123
B46.05.042	Corner block 41	123
B46.05.043	Corner block 42	123
B46.05.044	Corner block 43	123
B46.05.045	Corner block 44	123
B46.05.048	Corner block 48	124
B46.07.274	Base plate 6	185
B46.07.275	Base plate 7	185
B46.08.028	D28/40 Adapter	137
B51.03.003	Corner block 1	125
B51.03.004	Tension plug	109
B51.03.005	Drilling jig ø 10 mm	338
B51.03.006	Tension plug	112
B51.03.009	Tension plug	106
B51.03.010	Hinge tension plug	116
B51.03.011	Hinge tension plug	116
B51.03.020	Drilling jig, cleanroom 40	339
B51.03.030	Tension plug VA	109
B51.03.035	Drilling jig, cleanroom 50	339
B51.03.040	Tension plug	110
B51.03.041	Tension plug	110
B51.03.042	Tension plug, parallel	118
B51.03.043	Tension plug, front side	117
B51.03.044	Tension plug, front side	117
B51.03.050	Anchor fastener	113
B51.03.055	Parallel connector, single M8	119
B51.03.056	Parallel connector 2/40 M8	119
B51.03.057	Parallel connector 2/50 M8	119
B51.03.060	Clamping jaw	114
B51.03.070SI	Bolt fastener 40	115
B51.03.070SW	Bolt fastener 40	115
B51.03.071SI	Bolt fastener 80	115
B51.03.071SW	Bolt fastener 80	115
B51.03.073SI	Bolt fastener 50	115
B51.03.073SW	Bolt fastener 50	115

Index – Items by Item Number

B51.03.074SI	Bolt fastener 100		115
B51.03.074SW	Bolt fastener 100		115
B51.03.090	Tension plug S		111
B51.03.100.SI	Cleanroom fastener		108
B51.03.100.SW	Cleanroom fastener		108
B60.00.001	Flange roller 1 wheel ø 60		211
B60.00.002	Flange roller 2 wheel ø 60		211
B60.00.003	Flange roller A1 wheel ø 66		212
B60.00.004	Flange roller A1 wheel ø 66		212
B60.01.001	Track roller wheel ø 52		211
B60.01.003	Track roller A4 wheel ø 60		212
B60.01.005	Track roller A4 wheel ø 60		212
B60.02.002	Guide roller A2 wheel ø 68		212
B60.02.019	Guide roller A2 wheel ø 68		212
B60.04.002	mk mini-roller		210
B61.00.001	RBS-P 2065/2066	ø 20	298
B61.00.002	RBS-P 2065/2066	ø 40	298
B61.00.003	RBS-P 2065/2066	ø 50	298
B66.00.003	End stop RBS-P 2065/2066		298
B67.02.001	Levelling foot ø 79	M12	167
B67.02.002	Levelling foot ø 79	M16	167
B67.02.009	Levelling foot angle	M12	175
B67.02.010	Levelling foot angle	M16	175
B67.02.027	Levelling foot ø 80	M12	167
B67.02.028	Levelling foot ø 80	M16	167
B67.02.057	Levelling foot ø 45	M10	167
B67.02.075	Levelling foot ø 79	M12	167
B67.02.076	Levelling foot ø 45	M12	167
B67.02.077	Levelling foot ø 80	M12	167
B67.02.080	Levelling foot ø 110	M16	172
B67.02.081	Levelling foot ø 110	M16	172
B67.02.082	Levelling foot ø 110	M16	172
B67.02.087	Levelling foot ø 110	M16	172
B67.02.090	Levelling foot ø 80	M16	173
B67.02.091	Levelling foot ø 80	M16	173
B67.02.092	Levelling foot ø 80	M16	173
B67.02.097	Levelling foot ø 80	M16	173
B67.02.135	Levelling foot ø 39	M16	171
B67.02.136	Levelling foot ø 39	M16	171
B67.02.141	Levelling foot ø 99	M16	169
B67.02.142	Levelling foot ø 99	M16	169
B67.02.143	Levelling foot ø 99	M16	170
B67.02.144	Levelling foot ø 99	M20	169
B67.02.145	Levelling foot ø 99	M20	169
B67.02.146	Levelling foot ø 99	M20	170
B67.02.147	Levelling foot ø 119	M20	170
B67.02.148	Levelling foot ø 119	M20	170
B67.02.149	Levelling foot ø 119	M20	170
B67.02.150	Levelling foot ø 76	M16	168
B68.02.007	Locking piece		262
B68.02.017	Extension-double bit lock		262
B68.02.018	Extension-double bit lock		262
B68.02.019	Extension-cylinder lock		262
B68.02.020	Extension-cylinder lock		262
B68.02.030	Slam latch, Compact		272
B68.02.031	Slam latch, PRO		272
B68.02.033	Emergency opener		273
B68.02.051	Cylinder lock		263
B68.02.101	Ball latch		261
B68.02.102	Ball latch		261
B68.02.151.0360	Tower bolt, lower		264
B68.02.152.0360	Tower bolt, upper		264
B68.06.005	Frame extension		262
B68.07.001	Window, single-leaf		234
B68.07.002	Window, single-leaf		235
B68.07.003	Window, double-leaf		236
B68.11.003	Roller unit		265
B68.11.005	Sliding door fitting, single		226
B68.11.006	Sliding door fitting, double		226
B69.50.001	Panel frame, single		231
B69.50.002	Panel frame, horizontal brace		231
B69.50.003	Panel frame, vertical brace		231
B69.51.001	Simple partition		223
B69.51.002	Partition with horizontal brace		223
B69.51.003	Partition with vertical brace		223
B69.55.010	Door lintel		224
B69.60.001	Swing door, single-leaf		225
B69.60.002	Swing door, single-leaf		225
B69.60.003	Swing door, single-leaf		225
B69.60.004	Swing door, single-leaf		225
B69.60.005	Swing door, double-leaf		225
B69.60.006	Swing door, double-leaf		225
B69.61.015	Sliding door, simple		227
B69.61.016	Sliding door, simple		227
B69.61.017	Sliding door, simple		227
B69.61.018	Sliding door, simple		227
B69.61.019	Sliding door, double		227
B69.61.020	Sliding door, double		227
B69.62.001	Simple lifting door		229
B69.62.002	Scissor door		229
B69.65.000	Post (without angle)		230
B69.65.001	Post 1		230
B69.65.002	Post 2		231
B69.65.003	Post 3		231

B69.65.004	Post 4	231
B69.90.001	Wire mesh with clamping profile	251
B69.90.002	Wire mesh with clamping profile	251
B69.90.003	Welded grid with fence clip	252
B69.90.005	Welded grid with fence clip	252
B69.90.101	Acrylic glass with sealing strip	254
B69.90.102	Acrylic glass with sealing strip	254
B69.90.103	Acrylic glass with panel clamp	249
B69.90.104	Acrylic glass with panel clamp	249
B69.90.201	Polycarbonate with sealing strip	254
B69.90.202	Polycarbonate with sealing strip	254
B69.90.203	Polycarbonate with sealing strip	254
B69.90.204	Polycarbonate with panel clamp	249
B69.90.205	Polycarbonate with panel clamp	249
B69.90.206	Polycarbonate with holder	248
B69.90.207	Polycarbonate with holder	248
B69.90.310	Steel sheet with angle	250
B69.90.311	Steel sheet with angle	250
B69.90.312	Steel sheet with angle	250
B69.90.501	Alucobond® with sealing strip	254
B69.90.502	Alucobond® with sealing strip	254
B69.90.701	Polycarbonate with sealing strip	253
B69.90.702	Polycarbonate with sealing strip	253
B69.90.710	Acrylic glass with sealing strip	253
B69.90.711	Acrylic glass with sealing strip	253
B69.90.720	Steel sheet with sealing strip	253
B69.91.004	Folding window, acrylic glass	238
B69.91.005	Folding window, polycarbonate	238
B69.91.006	Sliding window, polycarbonate	237
D05625	Square nut	142
D058016	Eye bolt	215
D058020	Eye bolt	215
D09121220	Cylinder head screw ISO4762 M12x20	145
D09121225	Cylinder head screw ISO4762 M12x25	145
D0912410	Cylinder head screw ISO4762 M4x10	145
D0912510	Cylinder head screw ISO4762 M5x10	145
D0912512	Cylinder head screw ISO4762 M5x12	145
D0912516	Cylinder head screw ISO4762 M5x16	145
D091258	Cylinder head screw ISO4762 M5x8	145
D0912610	Cylinder head screw ISO4762 M6x10	145
D0912612	Cylinder head screw ISO4762 M6x12	145
D0912616	Cylinder head screw ISO4762 M6x16	145
D0912620	Cylinder head screw ISO4762 M6x20	145
D0912812	Cylinder head screw ISO4762 M8x12	145
D0912816	Cylinder head screw ISO4762 M8x16	145
D0912816A2	Cylinder head screw ISO4762 A2	145
D0912820	Cylinder head screw ISO4762 M8x20	145
D0912820A2	Cylinder head screw ISO4762 A2	145
D0912825	Cylinder head screw ISO4762 M8x25	145
D0912830	Cylinder head screw ISO4762 M8x30	145
D0912835	Cylinder head screw ISO4762 M8x35	145
D0912840	Cylinder head screw ISO4762 M8x40	145
D0914410	Threaded pin M4x10	147
D091446	Threaded pin M4x6	147
D091448	Threaded pin M4x8	147
D0914510	Threaded pin M5x10	147
D091456	Threaded pin M5x6	147
D091458	Threaded pin M5x8	147
D0914610	Threaded pin M6x10	147
D0914610A2	Threaded pin A2 M6x10	147
D091466	Threaded pin M6x6	147
D091466A2	Threaded pin A2 M6x6	147
D091468	Threaded pin M6x8	147
D091468A2	Threaded pin A2 M6x8	147
D0914810	Threaded pin M8x10	147
D0914810A2	Threaded pin A2 M8x10	147
D0914812	Threaded pin M8x12	147
D0914816	Threaded pin M8x16	147
D0914816A2	Threaded pin A2 M8x16	147
D0914820	Threaded pin M8x20	147
D09331020	Hexagon head screw M10x20	146
D09331025	Hexagon head screw M10x25	146
D09331030	Hexagon head screw M10x30	146
D09331230	Hexagon head screw M12x30	146
D0933616	Hexagon head screw M6x16	146
D0933620	Hexagon head screw M6x20	146
D0933625	Hexagon head screw M6x25	146
D0933630	Hexagon head screw M6x30	146
D0933635	Hexagon head screw M6x35	146
D093368	Hexagon head screw M6x8	146
D0933812	Hexagon head screw M8x12	146
D0933816	Hexagon head screw M8x16	146
D0933816A2	Hexagon head screw A2 M8x16	146
D0933820	Hexagon head screw M8x20	146
D0933820A2	Hexagon head screw A2 M8x20	146
D0933825	Hexagon head screw M8x25	146
D0933825A2	Hexagon head screw A2 M8x25	146
D0933830	Hexagon head screw M8x30	146
D0933835	Hexagon head screw M8x35	146
D0933840	Hexagon head screw M8x40	146
D093410	Hexagon nut M10	147
D093412	Hexagon nut M12	147
D09345	Hexagon nut M5	147
D09345A2	Hexagon nut A2 M5	147

Index – Items by Item Number

D09346	Hexagon nut	M6	147
D09346A2	Hexagon nut A2	M6	147
D09348	Hexagon nut	M8	147
D09348A2	Hexagon nut A2	M8	147
D67968	Tension washer ø 8,4		107/147
D67968A2	Tension washer A2 ø 8,4		107/148
D69121025	Cylinder head screw ISO4762	M10x25	145
D69121230	Cylinder head screw ISO4762	M12x30	145
D6912510	Cylinder head screw ISO4762	M5x10	145
D6912512	Cylinder head screw ISO4762	M5x12	145
D6912520	Cylinder head screw ISO4762	M5x20	145
D691258	Cylinder head screw ISO4762	M5x8	145
D6912616	Cylinder head screw ISO4762	M6x16	145
D6912620	Cylinder head screw ISO4762	M6x20	145
D6912816	Cylinder head screw ISO4762	M8x16	145
D6912816A2	Cylinder head screw ISO4762 A2		145
D6912820	Cylinder head screw ISO4762	M8x20	107
D6912820	Cylinder head screw ISO4762	M8x20	145
D6912820A2	Cylinder head screw ISO4762 A2		107
D6912820A2	Cylinder head screw ISO4762 A2		145
D6912825	Cylinder head screw ISO4762	M8x25	145
D6912830	Cylinder head screw ISO4762	M8x30	145
D7991410	Countersunk head screws M4x10		145
D7991410A2	Countersunk head screws M4x10		145
D7991412	Countersunk head screws M4x10		145
D7991416	Countersunk head screws M4x10		145
D7991416A2	Countersunk head screws M4x10		145
D7991435A2	Countersunk head screws M4x10		145
D799146	Countersunk head screws M4x10		145
D7991510	Countersunk head screws M4x10		145
D7991510A2	Countersunk head screws M4x10		145
D7991512	Countersunk head screws M4x10		145
D7991516	Countersunk head screws M4x10		145
D7991525	Countersunk head screws M4x10		145
D799158	Countersunk head screws M4x10		145
D799158A2	Countersunk head screws M4x10		145
D7991610	Countersunk head screws M4x10		145
D7991612	Countersunk head screws M4x10		145
D7991612A2	Countersunk head screws M4x10		145
D7991616	Countersunk head screws M4x10		145
D7991616A2	Countersunk head screws M4x10		145
D7991620	Countersunk head screws M4x10		145
D7991812	Countersunk head screws M4x10		145
D7991816	Countersunk head screws M4x10		145
D7991816A2	Countersunk head screws M4x10		145
D7991820	Countersunk head screws M4x10		145
D7991820A2	Countersunk head screws M4x10		145
D7991825	Countersunk head screws M4x10		145
D7991830	Countersunk head screws M4x10		145
D7991835A2	Countersunk head screws M4x10		145
K00112121150	Steel sheet, galvanised 1.5 mm		242
K00112131150	Steel sheet, painted 1.5 mm		242
K0011311121503	Round hole perforated sheet		245
K0011311121505	Round hole perforated sheet		245
K0011311121508	Round hole perforated sheet		245
K0011311121510	Round hole perforated sheet		245
K0011311122003	Round hole perforated sheet		245
K0011311122005	Round hole perforated sheet		245
K0011311122008	Round hole perforated sheet		245
K0011311122010	Round hole perforated sheet		245
K0011312121510	Square hole perforated sheets		245
K0011312122010	Square hole perforated sheets		245
K00128221.40	Wire mesh, steel 4 mm		244
K00128222.40	Wire mesh, steel 4 mm		244
K00128321.40	Welded grid	4 mm	244
K00128323.40	Welded grid	4 mm	244
K00128324.40	Welded grid	4 mm	244
K00128421.40	Welded grid, galvanised	4 mm	244
K00205121150	VA steel plate, ground	1,5 mm	243
K00205121200	VA steel plate, ground	2 mm	243
K002061211150	Square hole perforated sheets		245
K00305321150	Aluminium sheet	1,5 mm	242
K00305321200	Aluminium sheet	2 mm	242
K00305321250	Aluminium sheet	2,5 mm	242
K0030641125	Chequer sheet 2.5/4 mm		243
K0030641135	Chequer sheet 3.5/5 mm		243
K0030641150	Chequer sheet 5/6.5 mm		243
K00315121.40	Wire mesh, aluminium	4 mm	244
K00315122.40	Wire mesh, aluminium	4 mm	244
K00316223004	Alucobond®		242
K00316223006	Alucobond®		242
K01B211004	Polycarbonate, clear	4 mm	241
K01B211005	Polycarbonate, clear	5 mm	241
K01B211006	Polycarbonate, clear	6 mm	241
K01B231004	Polycarbonate, tinted grey	4 mm	241
K01B231005	Polycarbonate, tinted grey	5 mm	241
K01D211004	Acrylic glass	4 mm	241
K01D211005	Acrylic glass	5 mm	241
K01D211006	Acrylic glass	6 mm	241
K01P211005	PETG, clear	5 mm	241
K01P211006	PETG, clear	6 mm	241
K101120001	mk mini-roller		210
K106000140	Swivel caster (A) wheel ø 50		192
K106000141	Swivel caster (A) wheel ø 75		192

K106000142	Swivel caster (A) wheel ø 100		192
K106000143	Swivel caster (A) wheel ø 125		192
K106000144	Swivel caster (A) wheel ø 100		192
K106000145	Swivel caster (B) wheel ø 125		193
K106000148	Swivel caster (B) wheel ø 125		193
K106001040	Fixed caster (A) wheel ø 50		192
K106001041	Fixed caster (A) wheel ø 75		192
K106001042	Fixed caster (A) wheel ø 100		192
K106001043	Fixed caster (A) wheel ø 125		192
K106001044	Fixed caster (A) wheel ø 100		192
K106001045	Fixed caster (B) wheel ø 125		193
K106001048	Fixed caster (B) wheel ø 125		193
K110000009	Bracket handle 117 mm		274
K110000010	Bracket handle 179 mm		274
K110000011	Bracket handle 200 mm		275
K110000012	Bracket handle 300 mm		275
K110000013	Bracket handle 400 mm		275
K110000020	Bracket handle 152 mm		274
K110000021	Bracket handle 122 mm		274
K110000023	Bracket handle 135 mm		276
K110000025	Bracket handle 240 mm		276
K110020028	Handwheel	ø 80	208
K110020030	Handwheel	ø 100	208
K110020031	Handwheel	ø 125	208
K110030055	Clamping lever, die-cast zinc		209
K110030056	Clamping lever, die-cast zinc		209
K110030057	Clamping lever, die-cast zinc		209
K110030200	Clamping lever, plastic		209
K110030201	Clamping lever, plastic		209
K110030202	Clamping lever, plastic		209
K110030204	Clamping lever, plastic		209
K110030205	Clamping lever, plastic		209
K110030206	Clamping lever, plastic		209
K110060003	Levelling foot M10		166
K110060004	Levelling foot M8		166
K111010002	Wing repair washer	ø 8,4	147
K111010014	Ribbed washers	ø 4,3	147
K111010015	Ribbed washers	ø 5,3	147
K111010016	Ribbed washers	ø 6,4	147
K111010017	Ribbed washers	ø 8,4	147
K111010018	Ribbed washers	ø 10,5	147
K111010019	Ribbed washers	ø 13	147
K111010020	Ribbed washers A2	ø 4,3	147
K111010021	Ribbed washers A2	ø 5,3	147
K111010022	Ribbed washers A2	ø 6,4	147
K111010023	Ribbed washers A2	ø 8,4	147
K111010024	Ribbed washers A2	ø 10,5	147

K111010025	Ribbed washers A2	ø 13	147
K111010046	Ribbed washers	ø 7	147
K111010047	Ribbed washers A2	ø 7	147
K111020006	Clip (series 40)	M4	142
K111020007	Clip (series 40)	M5	142
K111020008	Clip (series 40)	M6	142
K112010002	Flanged button-head screws	M8x12	146
K112010003	Flanged button-head screws	M8x16	146
K112010004	Flanged button-head screws	M8x20	146
K112010010	Flanged button-head screws	M6x8	146
K112010011	Flanged button-head screws	M6x10	146
K112010012	Flanged button-head screws	M6x12	146
K112010013	Flanged button-head screws	M6x16	146
K112010021	Flanged button-head screws	M5x10	146
K112010022	Flanged button-head screws	M5x12	146
K112010028	Flanged button-head screws	M5x8	146
K112010102	Flanged button-head screws	A2	146
K112010103	Flanged button-head screws	A2	146
K112010104	Flanged button-head screws	A2	146
K112030002	Threaded insert	M3x6	19/146
K112030005	Threaded insert	M5x10	19/146
K112030006	Threaded insert	M6x12	19/146
K112030008	Threaded insert	M8x15	19/107/146
K112030010	Threaded insert	M12x22	19/146
K112030104	Helicoil	M4x0,7x6	19/146
K112030106	Helicoil	M6x1x9	19/146
K112030109	Helicoil	M8x1.25x16	19/146
K112030110	Helicoil	M10x1.5x15	19/146
K112280001	D28 T-connector		132
K112280003	D28 corner fastener		132
K112280004	D28/40 Adapter		137
K112280005	D28 45° connector		134
K112280006	D28 X cross connector		133
K112280007	D28 parallel connector 1		136
K112280008	D28 ball joint 1		135
K112280009	D28 angle brace		134
K112280010	D28 ball joint 2		135
K112280011	D28 parallel connector 2		136
K112510020	Chipboard screw ø 4x25		291
K113060001	Bumper, type D M6x15		214
K113060002	Bumper, type D M8x20		214
K113060003	Bumper, type D M10x28		214
K113060004	Bumper, type D M6x12		214
K113060006	Bumper, type K/D M6x18		214
K113060007	Bumper, type K/D M10x28		214
K113060011	Bumper, type KP/D M8x20		214
K113060012	Bumper, type KP/D M8x10		214

Index – Items by Item Number

K115010093	O-ring ø 12x2 mm		206
K115030010	Brush strip H=10 mm		162
K115030015	Brush strip H=15 mm		162
K115030020	Brush strip H=20 mm		162
K115030025	Brush strip H=25 mm		162
K115030030	Brush strip H=30 mm		162
K117050006	Key		262
K117050009	Slam latch, Compact		272
K120000118	Monitor mount, five-axis		302
K120000120	Bottle holder, closed		305
K120000121	Bottle holder, open		305
K120010001	Roller unit		303
K120010003	Snap hook		303
K120010004	Sliding piece		303
K120010005	Spring balancer F3 DIN 15112		303
K120010006	Spring balancer F2 DIN 15112		303
K12002.0600	Floor mat 600 mm		315
K12002.0800	Floor mat 800 mm		315
K12002.1000	Floor mat 1000 mm		315
K12002.1200	Floor mat 1200 mm		315
K12003.0600	Floor mat B1 600 mm		315
K12003.0800	Floor mat B2 800 mm		315
K12003.1000	Floor mat B3 1000 mm		315
K12003.1200	Floor mat B4 1200 mm		315
K1200535CGE.	Roller strip		299
K1200535FGE.	Roller strip with flanged rollers		299
K12005Z0001	35/28 H holder		299
K12005Z0002	35/28 L holder		299
K12005Z0003	35/40 H holder		299
K12005Z0004	35/40 L holder		299
K310.000.015.003	Cable gland, nut		313
K310.000.018.007	Cable gland		313
K370000010	Safety interlock AZ 16ZVRK		267
K370000011	Actuating key AZ 15/16-B1-1747		267
K370000012	Safety interlock BNS 16-12ZV		268
K370000013	Actuating key BPS 16 Magnet		268
K370000020	Solenoid latch AZM		270
K370000021	Actuating key AZM 161-B1		270
K370000022	Electronic solenoid latch		271
K370000023	Actuating key AZ/AZM 300-B1		271
K370000030	Hinged safety interlock		266
K370020020	Power strip, 3 outlets		311
K370020021	Power strip, 6 outlets		311
K5BA100007	Plug screw	G1/2″	206
K5BA100008	Plug screw	G1/4″	206
K5BA100078	Coupling	G1/4″	206
K5BB100016	Polyamide sealing ring	G1/4″	206
K5BB100018	Polyamide sealing ring	G1/2″	206
K901130001	Magnetic holder for nuts		337
K902005050	Wrench set, 9 pieces		337
K902010004	Installation tool for M3 insert		336
K902010005	Installation tool for M3 insert		336
K902010008	Installation tool for M5 insert		336
K902010009	Installation tool for M5 insert		336
K902010010	Installation tool for M6 insert		336
K902010011	Installation tool for M6 insert		336
K902010012	Installation tool for M8 insert		336
K902010013	Installation tool for M8 insert		336
K902010016	Installation tool for M12 insert		336
K902010017	Installation tool for M12 insert		336
K902010204	Installation tool for M4 HELICOIL		336
K902010206	Installation tool for M6 HELICOIL		336
K902010208	Installation tool for M8 HELICOIL		336
K902010210	Installation tool for M10 HELICOIL		336
K902030001	Sanding sponge		337
K903000058	Drill ø 5.8		336
K903000070	Drill ø 7		336
K903000080	Drill ø 8		336
K903000090	Drill ø 9		336
K903060005	Tap M5		336
K903060008	Tap M8		336
K903060010	Tap M10		336
K903060012	Tap M12		336
K903060016	Tap M16		336
K903060105	Tap M5x0.5		336
K903060108	Tap M8x1		336
K903060109	Tap M9x1		336
K903060113	Tap M12x1.5		336
K903060116	Tap M16x1.5		336
K903060204	Tap (Helicoil) M4		336
K903060206	Tap (Helicoil) M6		336
K903060208	Tap (Helicoil) M8		336
K903060210	Tap (Helicoil) M10		336
K903070008	Forming tap M8		336
mk 2500	End cap, black 50x50 mm		154
mk 2501	End cap mk 2001		154
mk 2502	End cap 80x80 mm		153
mk 2502SI	End cap 80x80 mm		153
mk 2503	End cap mk 2030		154
mk 2504	End cap mk 2004		154
mk 2505	End cap 100x100 mm		154
mk 2507	End cap 40x40 mm		152
mk 2507SI	End cap, silver 40x40 mm		152
mk 2508	End cap 40x80 mm		152

mk 2508SI	End cap 40x80 mm		152
mk 2523	End cap mk 2040.14		152
mk 2524	End cap mk 2040.15		152
mk 2529	End cap mk 2040.23		153
mk 2538	Guide		317
mk 2539	Guide		317
mk 2544	Fence clip mk 2544		252
mk 2546	Clip 40		202
mk 2550	Clip 50		202
mk 2553	Retaining plug, green	M5	144
mk 2554	Retaining plug, white	M6	144
mk 2555	Retaining plug, red	M8	144
mk 2556	Retaining plug, yellow	M6	144
mk 2557	Retaining plug, blue	M8	144
mk 2559	Retaining plug, orange	M10	144
mk 2560	Retaining plug, purple	M12	144
mk 2561	End cap mk 2060.01		155
mk 2562	End cap mk 2060.02		155
mk 2563	End cap mk 2060.05		155
mk 2565	End cap mk 2025.22		151
mk 2575	Guide		317
mk 2582	End cap D28 round tube profile		150
mk 3008	Sealing strip, black		255
mk 3008SI	Sealing strip, silver-grey		255
mk 3010	Closure strip, black		156
mk 3011	Cover profile, black		157
mk 3012	Closure strip, black		156
mk 3013	Closure strip, grey		156
mk 3014	Closure strip, blue		156
mk 3015	Closure strip, yellow		156
mk 3016	Closure strip, green		156
mk 3017	Closure strip, red		156
mk 3019	Closure strip, silver-grey		156
mk 3020	Sealing strip		254
mk 3021	Sealing strip		254
mk 3025	Cover profile, black		157
mk 3026	Closure strip, black		156
mk 3027	Sealing strip		254
mk 3030	Cover profile, black		157
mk 3032	Cover profile, black		157
mk 3034	Sealing strip		253
mk 3035	Cover profile, black		157
mk 3036	Cover profile, grey		157
T25.50.1000	Angle 15	Set	78
T25.50.1001	Angle 40	Set	78
T25.50.1010	Angle S15	Set	79
T25.50.1012	Angle S40	Set	79
T25.50.1020	Angle A25/15/2	Set	78
T25.50.1021	Angle A25/40/2	Set	78
T25.50.3000	Straight plate 01	Set	96
T25.50.3001	Straight plate 02	Set	96
T25.50.3002	Angle plate 01	Set	96
T25.50.3006	T-plate 01	Set	96
T50.05.0045	Angle plate 03	Set	99
T50.05.0046	T-plate 03	Set	99
T50.05.0047	Straight plate 07	Set	98
T50.05.0051	Angle plate 13	Set	99
T50.05.0052	Straight plate 03	Set	98
T50.05.0053	Straight plate 05	Set	97
T50.05.0070	Straight plate 09	Set	98
T50.05.0077	Straight plate 04	Set	98
T82.00.0023	Angle P1	Set	80
T82.00.0024	Angle P3	Set	80
T82.02.0001	Angle A1	Set	83
T82.03.0001	Angle A3	Set	83
T82.05.0003	Angle B25	Set	83
T82.05.0004	Angle B50	Set	84
T82.05.0006	Angle B100	Set	84
T82.05.0012	Angle B150	Set	84
T82.05.0013	Angle B40	Set	83
T82.05.0022	Angle B90	Set	84
T82.05.0026	Angle B20/40	Set	84
T82.05.0051	Angle B50s1	Set	84
T82.05.0052	Angle B50s2	Set	84
T82.05.0053	Angle B50s3	Set	84
T82.05.0055	Angle B40s2	Set	84
T82.06.0001	Angle C25	Set	85
T82.06.0003	Angle C90	Set	85
T82.06.0009	Angle C90/2	Set	85
T82.06.0010	Angle C140/2	Set	85
T82.06.0014	Angle C40/3	Set	85
T82.06.0040	Angle C25s	Set	85
T82.06.0041	Angle C40s	Set	85
T82.06.0042	Angle C90s	Set	85
T82.07.0001	Angle D25	Set	86
T82.07.0003	Angle D90	Set	86
T82.07.0009	Angle D90/2	Set	86
T82.07.0010	Angle D140/2	Set	86
T82.07.0013	Angle D40/3	Set	86
T82.07.0040	Angle D25s	Set	86
T82.07.0041	Angle D40s	Set	86
T82.07.0042	Angle D90s	Set	86
T82.07.0043	Angle D140s	Set	86
T82.40.0701	Angle E25	Set	80

T82.40.0702	Angle E40	Set	80
T82.40.0703	Angle E80	Set	80
T82.40.0704	Angle E65	Set	80
T82.40.0705	Angle E120	Set	81
T82.40.0741	Angle E25s	Set	81
T82.40.0742	Angle E40s	Set	81
T82.40.0744	Angle E65s	Set	81
T82.40.0747	Angle E40s3	Set	81
T82.40.0801	Angle F25	Set	81
T82.40.0802	Angle F40	Set	81
T82.40.0803	Angle F80	Set	81
T82.40.0804	Angle F65	Set	81
T82.40.0805	Angle F40/R	Set	81
T82.40.0841	Angle F25s	Set	82
T82.40.0844	Angle F65s	Set	82
T82.40.0901	Angle G25	Set	82
T82.40.0902	Angle G40	Set	82
T82.40.0903	Angle G80	Set	82
T82.40.0904	Angle G65	Set	82
T82.40.0941	Angle G25s	Set	82
T82.40.0942	Angle G65s	Set	82
T82.60.0701	Angle H40	Set	87
T82.60.0702	Angle H100	Set	87
T82.60.0741	Angle H40s	Set	87
T82.60.0742	Angle H100s	Set	87
T82.60.0801	Angle J40	Set	88
T82.60.0802	Angle J100	Set	88
T82.60.0901	Angle K40	Set	88
T82.60.0902	Angle K100	Set	88
T82.60.0941	Angle K40s	Set	88
T82.60.0942	Angle K100s	Set	88

Maschinenbau Kitz GmbH
Headquarters of the
mk Technology Group

Ampèrestrasse 18
53844 Troisdorf
Germany

Phone +49 228 4598-0
info@mk-group.com

www.mk-group.com